MP1570A
SONET/SDH/PDH/ATM Analyzer
Operation Manual
Vol.5
Add/Drop Measurement

Third Edition

Read this manual before using the equipment.
Keep this manual with the equipment.

ANRITSU CORPORATION

Document No.: M-W1724AE-3.0

Safety Symbols

To prevent the risk of personal injury or loss related to equipment malfunction, Anritsu Corporation uses the following safety symbols to indicate safety-related information. Insure that you clearly understand the meanings of the symbols BEFORE using the equipment. Some or all of the following five symbols may not be used on all Anritsu equipment. In addition, there may be other labels attached to products which are not shown in the diagrams in this manual.

Symbols used in manual

DANGER ⚠ This indicates a very dangerous procedure that could result in serious injury or death if not performed properly.

WARNING ⚠ This indicates a hazardous procedure that could result in serious injury or death if not performed properly.

CAUTION ⚠ This indicates a hazardous procedure or danger that could result in light-to-severe injury, or loss related to equipment malfunction, if proper precautions are not taken.

Safety Symbols Used on Equipment and in Manual

The following safety symbols are used inside or on the equipment near operation locations to provide information about safety items and operation precautions. Insure that you clearly understand the meanings of the symbols and take the necessary precautions BEFORE using the equipment.

This indicates a prohibited operation. The prohibited operation is indicated symbolically in or near the barred circle.

This indicates an obligatory safety precaution. The obligatory operation is indicated symbolically in or near the circle.

This indicates warning or caution. The contents are indicated symbolically in or near the triangle.

This indicates a note. The contents are described in the box.

These indicate that the marked part should be recycled.

MP1570A
SONET/SDH/PDH/ATM Analyzer
Operation Manual Vol.5 Add/Drop Measurement

20 March 2000 (First Edition)
10 December 2003 (Third Edition)

For Safety

WARNING ⚠

1. ALWAYS refer to the operation manual when working near locations at which the alert mark shown on the left is attached. If the operation, etc., is performed without heeding the advice in the operation manual, there is a risk of personal injury. In addition, the equipment performance may be reduced.
   Moreover, this alert mark is sometimes used with other marks and descriptions indicating other dangers.

2. Measurement Categories
   This instrument is designed for Measurement category I (CAT I). Don't use this instrument at the locations of measurement categories from CAT II to CAT IV.
   In order to secure the safety of the user making measurements, IEC 61010 clarifies the range of use of instruments by classifying the location of measurement into measurement categories from I to IV.
   The category outline is as follows:
   Measurement category I (CAT I):
   Secondary circuits of a device connected to an outlet via a power transformer etc.
   Measurement category II (CAT II):
   Primary circuits of a device with a power cord (portable tools, home appliance etc.) connected to an outlet.
   Measurement category III (CAT III):
   Primary circuits of a device (fixed equipment) to which power is directly supplied from the power distribution panel, and circuits from the distribution panel to outlets.
   Measurement category IV (CAT IV):
   All building service-line entrance circuits through the integrating wattmeter and primary circuit breaker (power distribution panel).

For Safety

WARNING ⚠

3. Laser radiation warning
   - NEVER look directly into the cable connector on the equipment nor into the end of a cable connected to the equipment. If laser radiation enters the eye, there is a risk of injury.
   - Laser Radiation Markings on a following page show the Laser Safety label attached to the equipment near the cable connector.

4. When supplying power to this equipment, connect the accessory 3-pin power cord to a grounded outlet. If a grounded outlet is not available, before supplying power to the equipment, use a conversion adapter and ground the green wire, or connect the frame ground on the rear panel of the equipment to ground. If power is supplied without grounding the equipment, there is a risk of receiving a severe or fatal electric shock.

Repair

WARNING ⚠

5. This equipment cannot be repaired by the user. DO NOT attempt to open the cabinet or to disassemble internal parts. Only Anritsu-trained service personnel or staff from your sales representative with a knowledge of electrical fire and shock hazards should service this equipment. There are high-voltage parts in this equipment presenting a risk of severe injury or fatal electric shock to untrained personnel. In addition, there is a risk of damage to precision parts.

Falling Over

6. This equipment should be used in the correct position. If the cabinet is turned on its side, etc., it will be unstable and may be damaged if it falls over as a result of receiving a slight mechanical shock.
   And also DO NOT use this equipment in the position where the power switch operation is difficult.

For Safety

WARNING ⚠

Battery Fluid

7. DO NOT short the battery terminals and never attempt to disassemble it or dispose of it in a fire. If the battery is damaged by any of these actions, the battery fluid may leak.
   This fluid is poisonous.
   DO NOT touch it, ingest it, or get in your eyes. If it is accidentally ingested, spit it out immediately, rinse your mouth with water and seek medical help. If it enters your eyes accidentally, do not rub your eyes, irrigate them with clean running water and seek medical help. If the liquid gets on your skin or clothes, wash it off carefully and thoroughly.

LCD

8. This instrument uses a Liquid Crystal Display (LCD); DO NOT subject the instrument to excessive force or drop it. If the LCD is subjected to strong mechanical shock, it may break and liquid may leak.
   This liquid is very caustic and poisonous.
   DO NOT touch it, ingest it, or get in your eyes. If it is ingested accidentally, spit it out immediately, rinse your mouth with water and seek medical help. If it enters your eyes accidentally, do not rub your eyes, irrigate them with clean running water and seek medical help. If the liquid gets on your skin or clothes, wash it off carefully and thoroughly.

For Safety

CAUTION ⚠

Replacing Fuse

CAUTION ⚠

1. Before Replacing the fuses, ALWAYS remove the power cord from the poweroutlet and replace the blown fuses. ALWAYS use new fuses of the type and rating specified on the fuse marking on the rear panel of the cabinet.

   T___A indicates a time-lag fuse.
   ___A or F___ A indicate a normal fusing type fuse.

   There is risk of receiving a fatal electric shock if the fuses are replaced with the power cord connected.

Cleaning

2. Keep the power supply and cooling fan free of dust.
   - Clean the power inlet regularly. If dust accumulates around the power pins, there is a risk of fire.
   - Keep the cooling fan clean so that the ventilation holes are not obstructed. If the ventilation is obstructed, the cabinet may overheat and catch fire.

3. The maximum input levels of the optical signal are 0 dBm for MU150002A 10G input, –8 dBm for MU150002A Option 01 2.5G input, and +3 dBm for MU150017A/B input. Excessive input level can damage the internal devices and circuit.

   Before performing a self loop-back test, always install 15 dB (when MP0127A/MP0128A/MP0129A or MU150008A/MU150009A/MU150010A installed), 10 dB (when MU150002A installed), or 5 dB (when MU150017A/B installed) attenuator between the output connector and the input connector.

For Safety

WARNING ⚠

Laser Safety

The laser safety is assured by correct operation of the warning means of the laser output. Before using the optical output, if it is not possible to check the optical emission using the warning means of the laser output at power-on or when the optical output switch is set to on, the laser output may be faulty. Do not use the equipment and call our service department or representative to request repair.

Optical units for the MP1570A SONET/SDH/PDH/ATM Analyzer have Class 1 laser emitting parts as specified in IEC 60825-1, or Class I and IIIb parts as specified in 21CFR 1040.10 (refer to Table 1). Classes are indicated on the label at the top panel of this equipment and the front panel of each unit (refer to Table 2 and Figs 1 to 5).

Do not look directly into the end of any cable connected to the optical output connector of the unit. Laser light can seriously damage the eyes. Operating this unit in a procedure other than that as described above might result in injury or damage from laser emission. Please follow the handling instructions carefully.

Table 1 Class of each unit

Model number	Standard name	
	IEC 60825-1	21CFR 1040.10
MP0111A	Class 1	Class I
MP0112A	Class 1	Class I
MP0113A	Class 1	Class I
MP0122B	Class 1	Class I
MP0127A	Class 1	Class IIIb
MP0128A	Class 1	Class IIIb
MP0129A	Class 1	Class IIIb
MU150001A/B	Class 1	Class IIIb
MU150008A	Class 1	Class IIIb
MU150009A	Class 1	Class IIIb
MU150010A	Class 1	Class IIIb
MU150031A/C	Class 1	Class IIIb
MU150061A/B	Class 1	Class IIIb

For Safety

Class 1 indicates the danger degree of the laser radiation specified below according to IEC 60825-1.

Class 1: Lasers that are safe under reasonably foreseeable conditions of operation, including the use of optical instruments for intra-beam viewing.

And, Class I, IIa, II, IIIa and IIIb indicates the degree of danger of the laser radiation outlined below as defined by 21CFR 1040.10.

Class I: Class I labels of laser radiation are not considered to be hazardous.

Class IIa: Class IIa labels of laser radiation are not considered to be hazardous if viewed for any period of time less than or equal to 1×10^3 seconds but are considered to be a chronic viewing hazard for any period of time greater than 1×10^3 seconds. The wavelength range of laser radiating is in 400 to 710 nm.

Class II: Class II labels of laser radiation are considered to be a chronic viewing hazard. The wavelength range of laser radiating is in 400 to 710 nm.

Class IIIa: Class IIIa labels of laser radiation are considered to be, depending upon the irradiance, either an acute intrabeam viewing hazard or chronic viewing hazard, and an acute viewing hazard if viewed directly with optical instruments. The wavelength range of laser radiating is in 400 to 710 nm.

Class IIIb: Class IIIb labels of laser radiation are considered to be an acute hazard to skin and eyes from direct radiation.

For Safety

Table 2

No.	Label	Description
[1]	AVOID EXPOSURE INVISIBLE LASER RADIATION IS EMITTED FROM THIS APERTURE	Aperture label (FDA 21CFR 1040.10)
[2]	DANGER INVISIBLE LASER RADIATION AVOID DIRECT EXPOSURE TO BEAM MAXIMUM POWER 10mw WAVELENGTH 1.31/1.55μm CLASS IIIb LASER PRODUCT	Explanatory label (FDA 21CFR 1040.10)
[3]	CLASS 1 LASER PRODUCT	Explanatory label (IEC 60825-1)
[4]		Warning label (IEC 60825-1)
[5]	CERTIFICATION LABEL THIS PRODUCT CONFORMS TO ALL APPLICABLE STANDARDS UNDER 21 CFR 1040.10	Certification label (FDA 21CFR 1040.10)
[6]	IDENTIFICATION LABEL ANRITSU CORP. 10-27, MINAMIAZABU 5-CHOME MINATO-KU, TOKYO 106, JAPAN MANUFACTURED AT: ANRITSU CORP. ATSUGI PLANT. .19	Identification label (FDA 21CFR 1040.10)

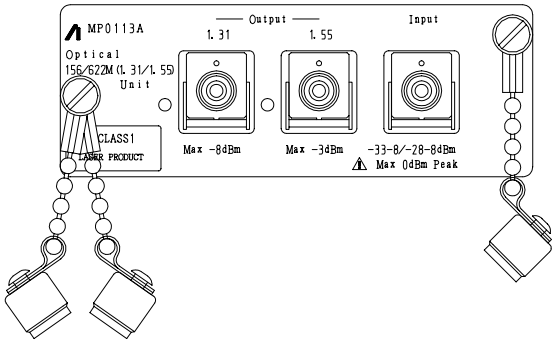

Fig. 1 MP0111A, MP0112A, MP0113A Front Panel of Unit

CAUTION ⚠

When only a Unit is purchased, an adhesive label is supplied with the Unit.
Please, attach it to the place, shown above.

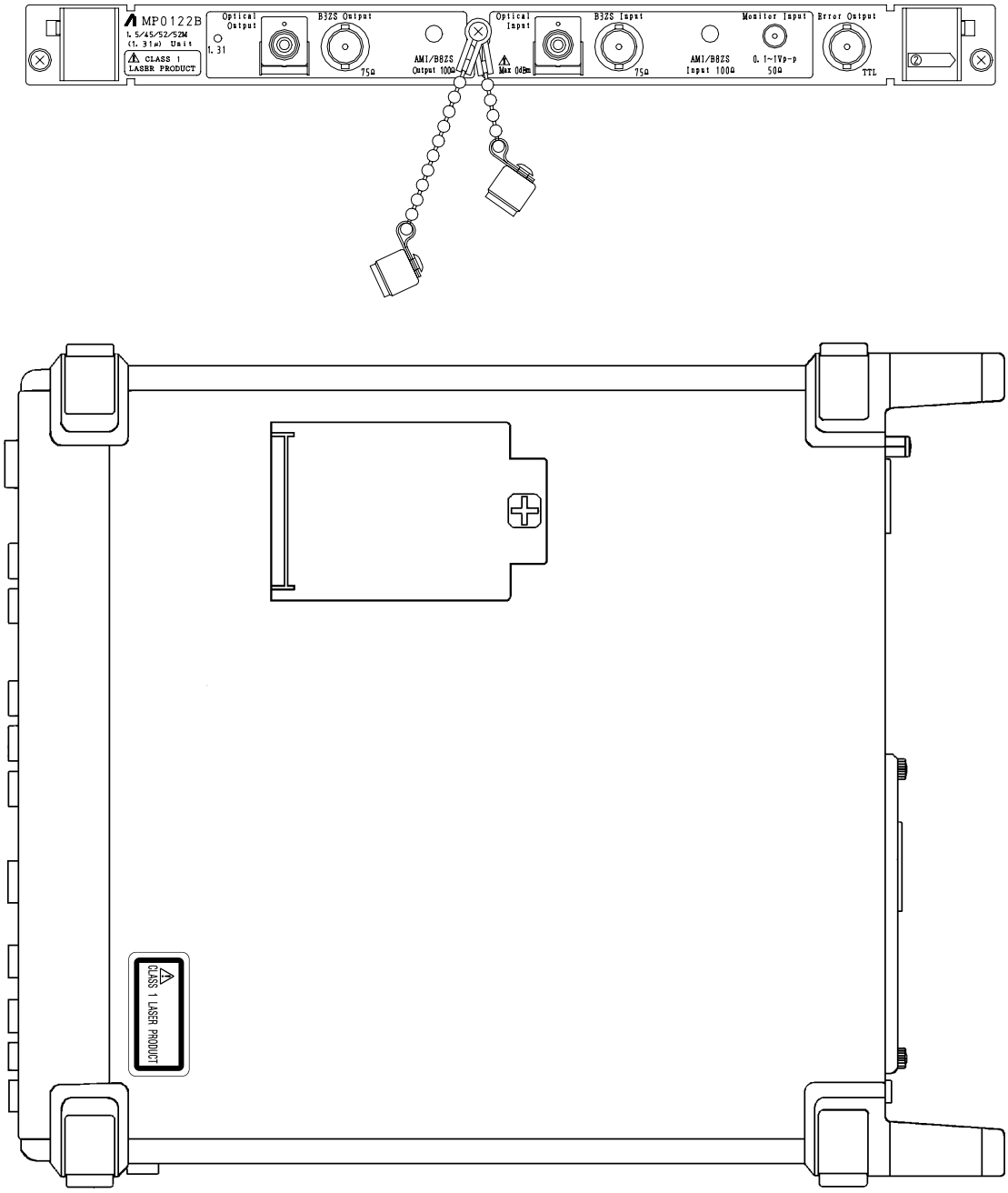

Fig. 2 MP0122B Front Panel of Unit and Top Panel of MP1570A
(Products shipping besides U.S.A.)

CAUTION ⚠

When only a Unit is purchased, an adhesive label is supplied with the Unit.
Please, attach it to the place, shown above.

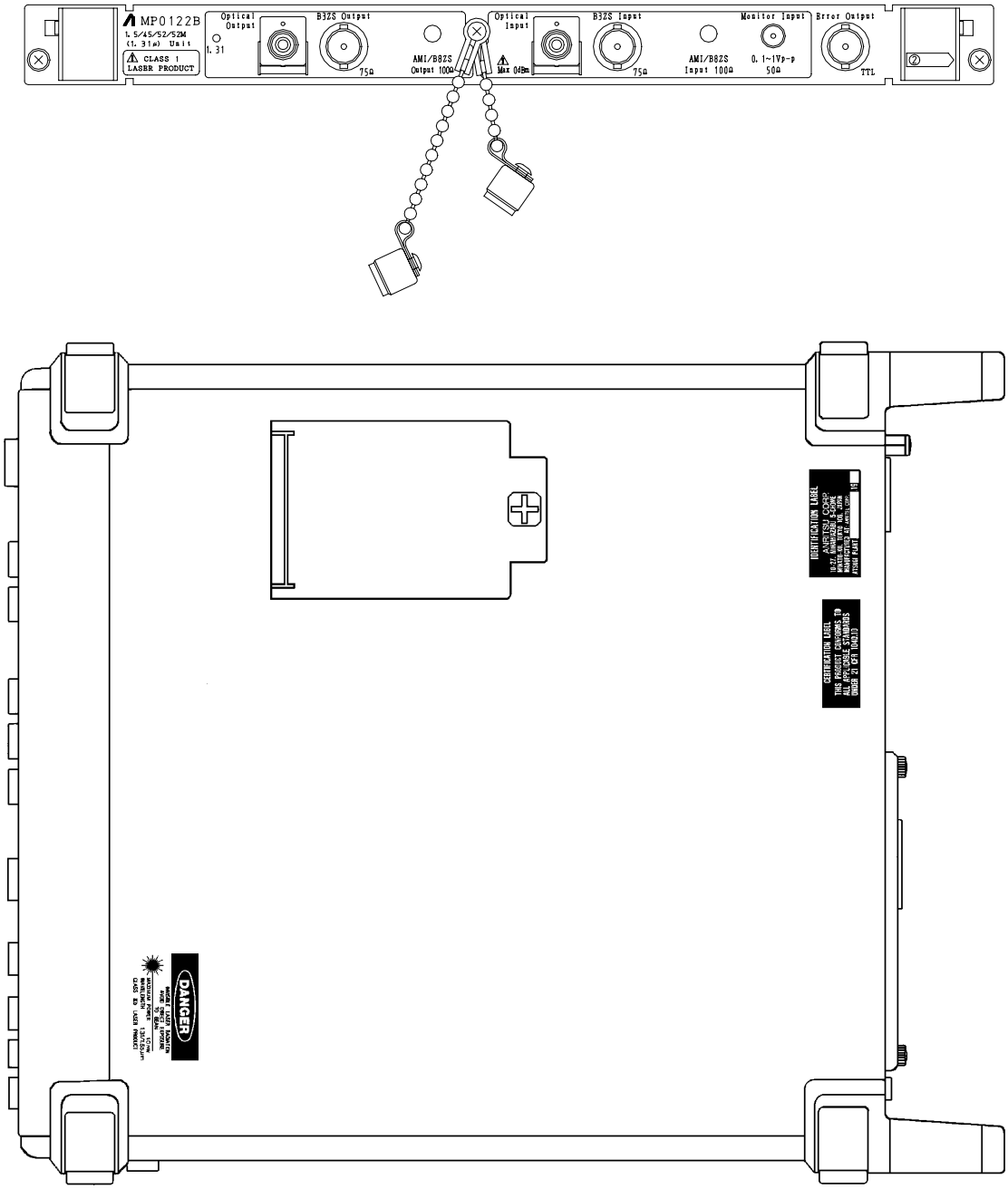

Fig. 3 MP0122B Front Panel of Unit and Top Panel of MP1570A
(Products shipping to U.S.A.)

CAUTION ⚠

When only a Unit is purchased, an adhesive label is supplied with the Unit.
Please, attach it to the place, shown above.

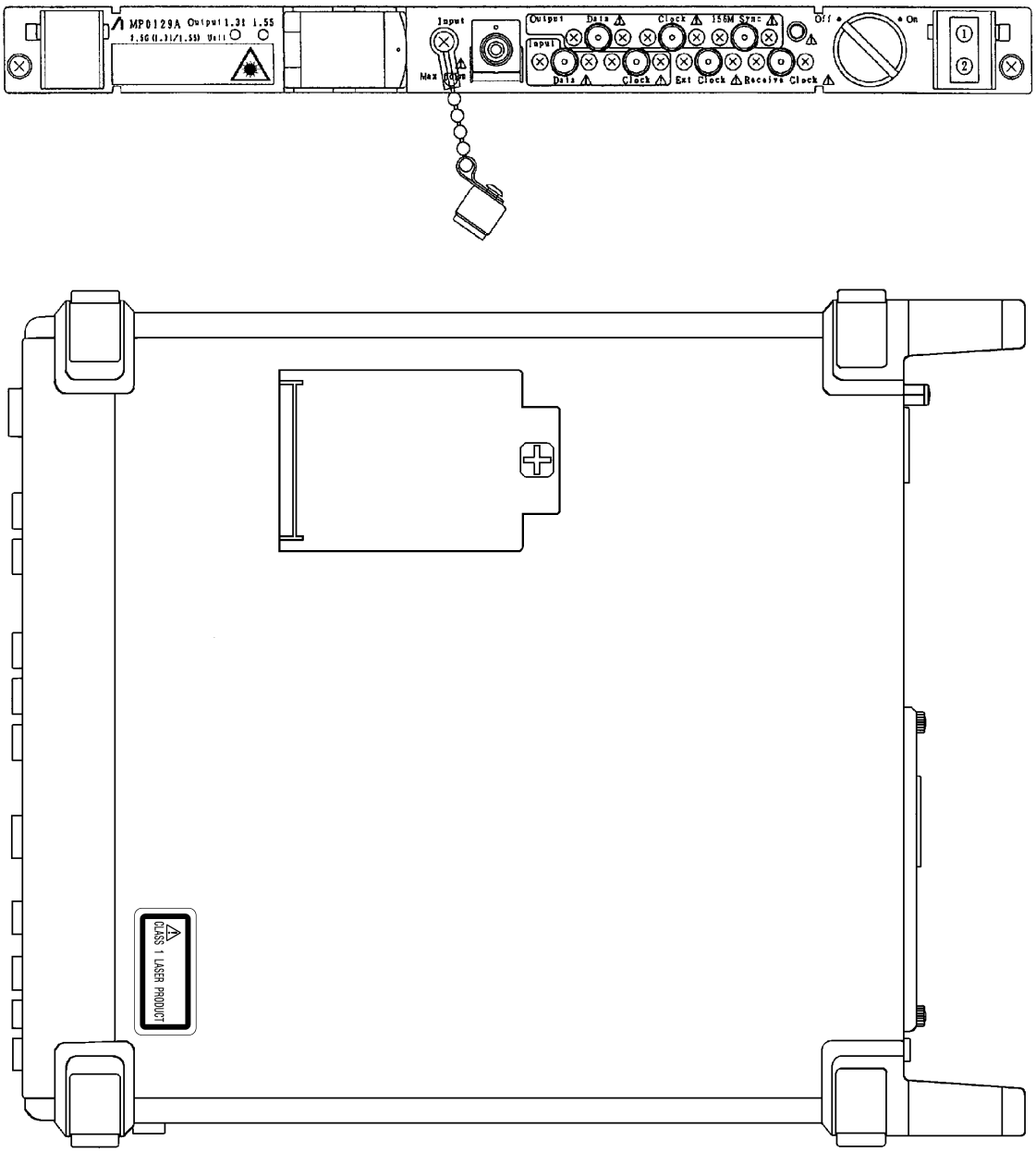

Fig. 4 MP0127A, MP0128A, MP0129A, MU150008A, MU150009A, MU150010A
Front Panel of Unit and Top Panel of MP1570A
(Products shipping besides U.S.A.)

CAUTION ⚠

When only a Unit is purchased, an adhesive label is supplied with the Unit.
Please, attach it to the place, shown above.

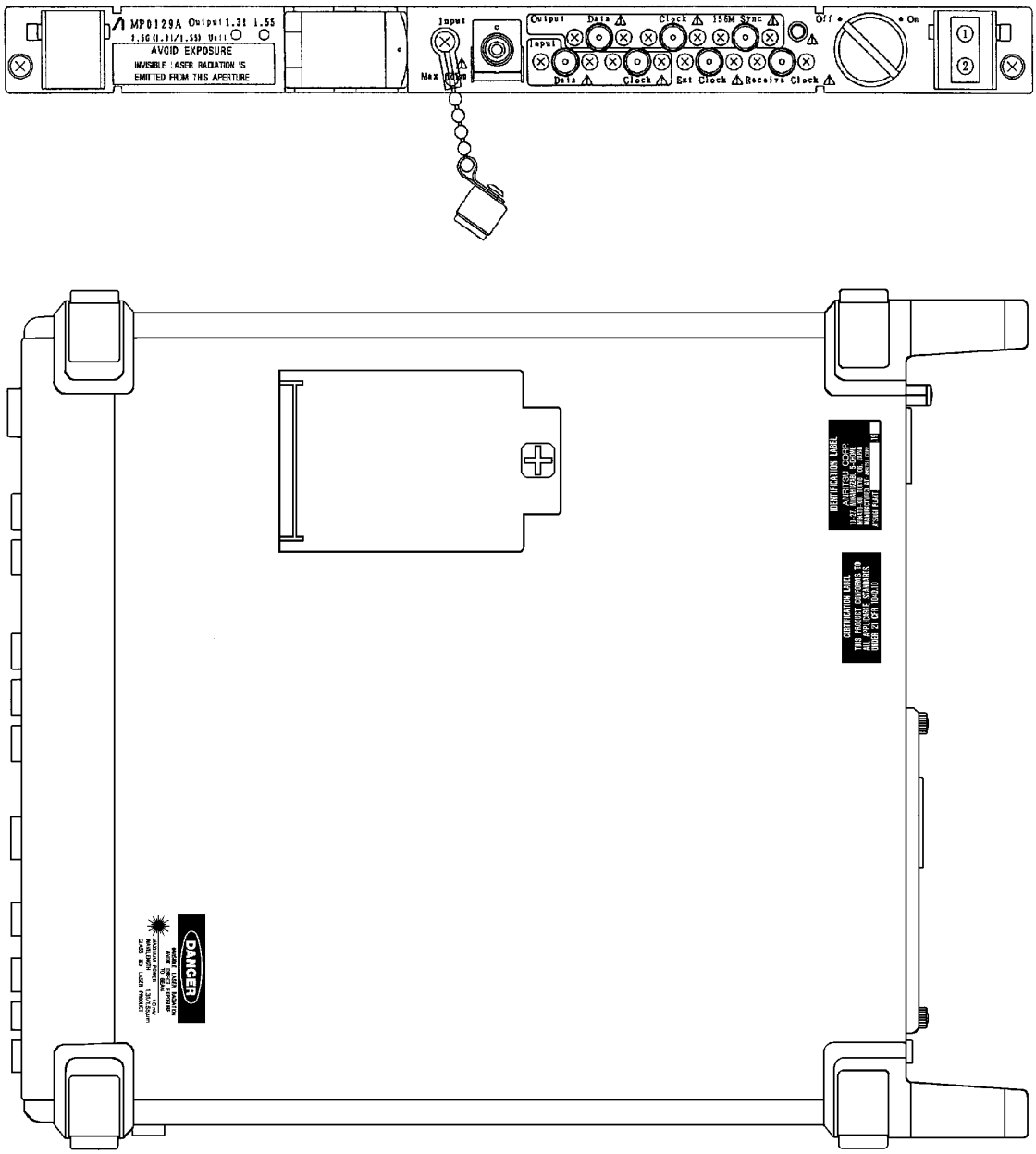

Fig. 5 MP0127A, MP0128A, MP0129A, MU150008A, MU150009A, MU150010A
Front Panel of Unit and Top Panel of MP1570A
(Products shipping to U.S.A.)

CAUTION ⚠

When only a Unit is purchased, an adhesive label is supplied with the Unit.
Please, attach it to the place, shown above.

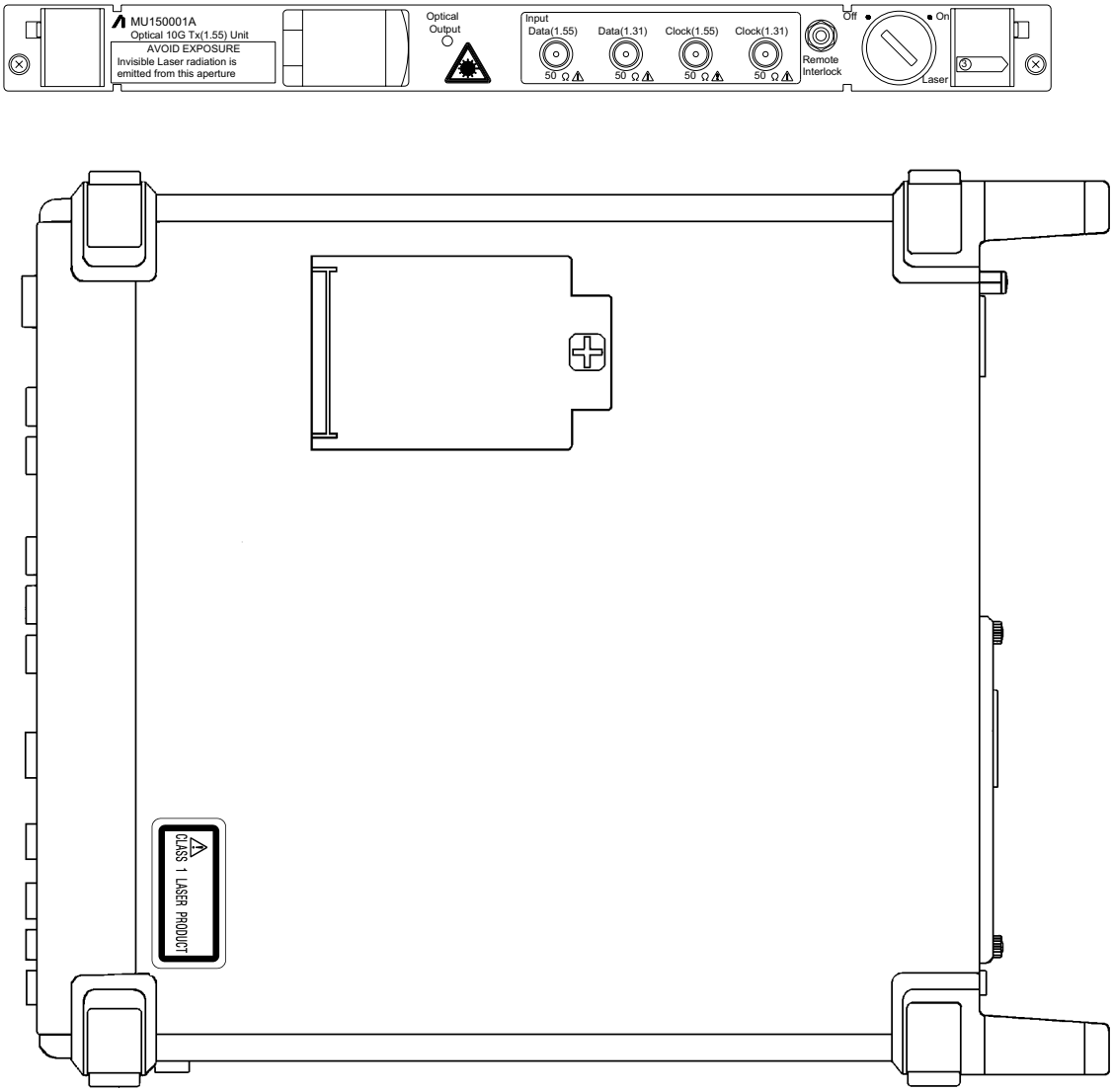

Fig. 6 MU150001A/B, MU150031A/C, MU150061A/B
Front Panel of Unit and Top Panel of MP1570A
(Products shipping besides U.S.A.)

CAUTION ⚠

When only a Unit is purchased, an adhesive label is supplied with the Unit.
Please, attach it to the place, shown above.

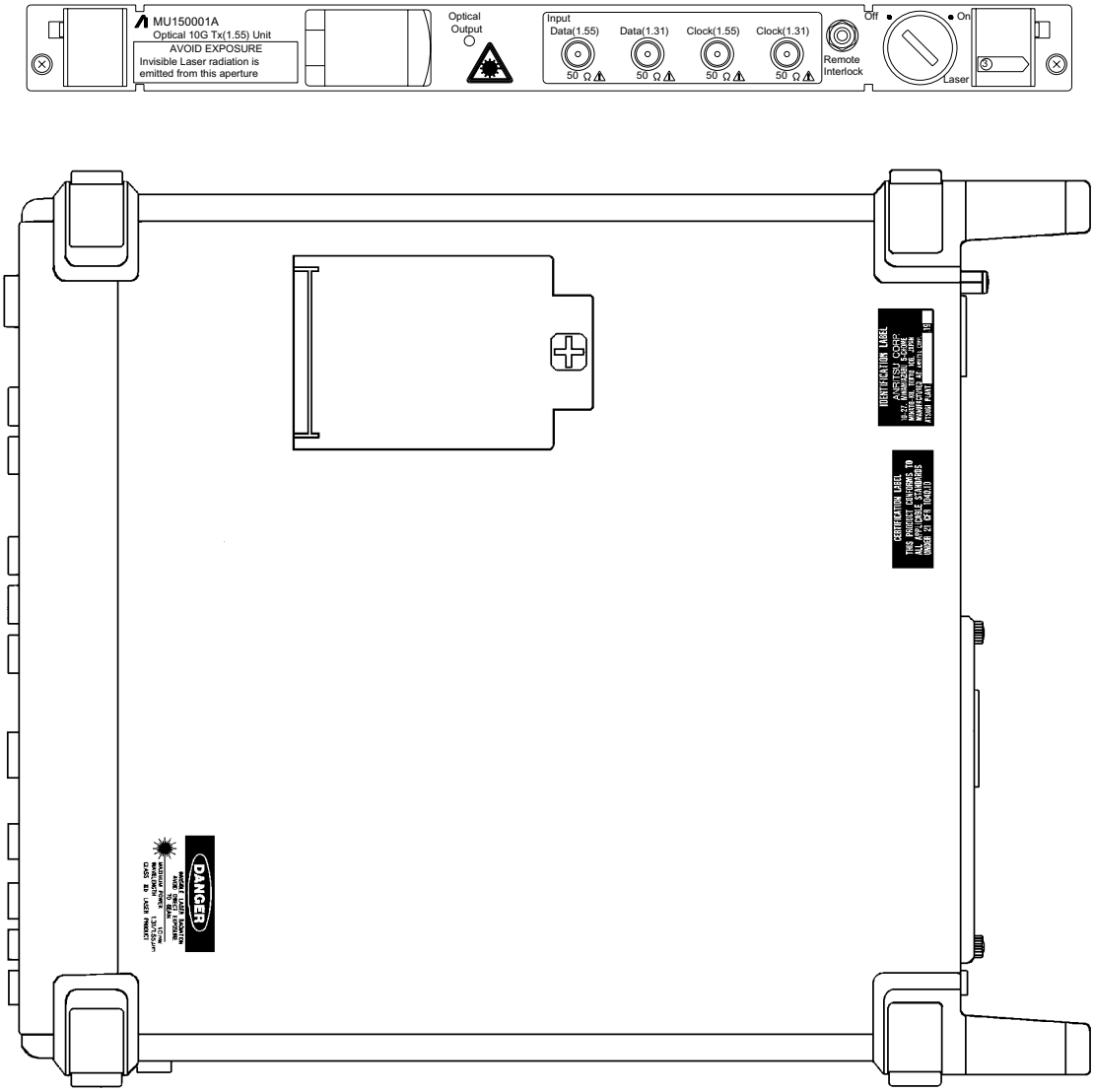

Fig. 7 MU150001A/B, MU150031A/C, MU150061A/B
Front Panel of Unit and Top Panel of MP1570A
(Products shipping to U.S.A.)

CAUTION ⚠

When only a Unit is purchased, an adhesive label is supplied with the Unit.
Please, attach it to the place, shown above.

For Safety

Security Measure Functions

The MP0127A, MP0128A, MP0129A, MU150001A/B, MU150008A, MU150009A, MU150010A, MU150031A/C, MU150061A/B are provided with the following security measure functions to prevent the possibility of infliction bodily injury on operators.

- Laser cut-off
  When the cable is disconnected from the optical output section, the protective cover closes and the laser emission stops.
- Laser output key lock
  The laser output is mainly controlled by the key switch of the laser On/Off. When the switch is set to the OFF position, the key can be removed. In this state, the laser is locked off.
- Remote control using the remote interlock connectors
  To ensure safe control of the laser output from a remote location, the laser output can be controlled using the remote interlock connectors of the Laser Output Remote Interlock section. When both the ends of these two connectors (white and black) are connected electrically, the laser can be emitted. When both the ends are disconnected, it is not possible to emit the laser. For the voltage of the open end, the potential is +5 V at the white connector for the black connector. The laser output can be controlled by any equipment with a 0/+5 V interface.
- Laser emission indicators
  These indicators on the optical output light while laser is being emitted.
- Laser output warning
  When the laser is set to ON, the laser emission indicator lights as a warning or 3 to 4 seconds before laser is actually emitted. The laser is not emitted during this period.

Handling

The following safety precautions should be observed when handling the MP0127A, MP0128A, MP0129A, MU150001A/B, MU150008A, MU150009A, MU150010A, MU150031A/C, MU150061A/B.

- Before installing/removing this unit in/from the main frame, always make sure the main frame power switch is set to OFF.
- Before connecting/disconnecting a cable to/from the optical output section of this unit, always be sure to set the Laser On/Off key switch to OFF.

For Safety

CAUTION ⚠

Replacing Memory Back-up Battery

This equipment uses a Poly-carbomonofluoride lithium battery to back-up the memory. This battery must be replaced by a service engineer when it has reached the end of its useful life; contact the Anritsu sales section or your nearest representative.

Note: The battery used in this equipment has a maximum useful life of 7 years. It should be replaced before this period has elapsed.

Make sure that the output level from the MP0111A, MP0112A, MP0113A, MP0122B, MP0127A, MP0128A, MP0129A, MU150001A, MU150001B, MU150008A, MU150009A, MU150010A, MU150031A/C or MU150061A does not exceed the maximum rated input level when connecting.

The laser output is mainly controlled by the key switch of the laser On/Off. Before turning the equipment on, be sure to set the Laser On/Off key switch to OFF.

Before making the connections, make sure that the input level does not exceed the absolute maximum rating level of the equipment.
The input device may be damaged when the input level exceeds the maximum rating of MP0127A, MP0128A, MP0129A, MU150002A, MU150008A, MU150009A and MU150017A/B in particular. Before performing a self loop-back test, always insert the attached 15-dB optical attenuator between the input and output connectors for the MP0127A, MP0128A, MP0129A, MU150008A, MU150009A and MU150010A. For the MU150002A or MU150017A/B, use the 10-dB or 5-dB attenuator, respectively. The input device will be damaged if the direct output is connected by using the optical cable only.

Floppy Disk

Don't place in a dusty area.
Clean the magnetic head periodically for normal operation.
Use a cleaning kit sold at market for cleaning.
Anritsu does not recommend any specific cleaning kit. Contact with Anritsu or our sales representative if you inquire about the cleaning kit.
If the floppy disk drive malfunctions even after the cleaning, it is considered to be a fault. Ask for repair to Anritsu or our sales representative.

Equipment Certificate

Anritsu Corporation certifies that this equipment was tested before shipment using calibrated measuring instruments with direct traceability to public testing organizations recognized by national research laboratories including the National Institute of Advanced Industrial Science and Technology, and the Communications Research Laboratory, and was found to meet the published specifications.

Anritsu Warranty

Anritsu Corporation will repair this equipment free-of-charge if a malfunction occurs within 1 year after shipment due to a manufacturing fault, provided that this warranty is rendered void under any or all of the following conditions.

- The fault is outside the scope of the warranty conditions described in the operation manual.
- The fault is due to mishandling, misuse, or unauthorized modification or repair of the equipment by the customer.
- The fault is due to severe usage clearly exceeding normal usage.
- The fault is due to improper or insufficient maintenance by the customer.
- The fault is due to natural disaster including fire, flooding, earthquake, etc.
- The fault is due to use of non-specified peripheral equipment, peripheral parts, consumables, etc.
- The fault is due to use of a non-specified power supply or in a non-specified installation location.

In addition, this warranty is valid only for the original equipment purchaser. It is not transferable if the equipment is resold.

Anritsu Corporation will not accept liability for equipment faults due to unforeseen and unusual circumstances, nor for faults due to mishandling by the customer.

Anritsu Corporation Contact

If this equipment develops a fault, contact Anritsu Service and Sales offices at the address at the end of paper-edition manual or the separate file of CD-edition manual.

Notes On Export Management

This product and its manuals may require an Export License/Approval by the Government of the product's country of origin for re-export from your country.
Before re-exporting the product or manuals, please contact us to confirm whether they are export-controlled items or not.
When you dispose of export-controlled items, the products/manuals are needed to be broken/shredded so as not to be unlawfully used for military purpose.

Disposing of Product

The MP1570A employs a Lithium Battery. Also, the MP0111A, MP0112A, MP0113A, MP0122B, MP0127A, MP0128A, MP0129A, MU150001A/B, MU150002A, MU150008A, MU150009A, MU150010A, MU150017A/B, MU150031A/C, MU150061A/B use PD/LD modules including arsenic. The MP0130A use IC including arsenic. At the end of its life, the equipment should be recycled or disposed properly according to the local disposal regulations.

About MP1570A Operation Manuals

MP1570A SONET/SDH/PDH/ATM Analyzer Operation Manuals comprise of the following eight documents. Use them properly according to the usage purpose.

Organization of MP1570A Operation Manuals

Vol. 1

Basic Operation SDH Edition

Describes the basic operation of MP1570A, PDH measurement and SDH measurements up to 622M (STM4). (The contents of this manual are basically the same as those of 'Basic Operation SONET Edition').

Basic Operation SONET Edition

Describes the basic operation of MP1570A, DSn measurement and SONET measurement of up to 622M (STS12). (The contents of this manual are basically the same as those of 'Basic Operation SDH Edition'.).

Vol. 2

Remote Control

Describes the remote control and program examples using the GPIB and RS-232C interfaces. (MP1570A is compatible with SPCI).

Vol. 3

ATM Measurement

Describes the contents of screens, operation procedures and remote control for the generation and analysis of the ATM signal.

Vol. 4

2.5G/10G Measurement

Describes the contents of screens, operation procedures and remote control for the generation and analysis of 2.5G (STM16) and 10G (STM64) signals.

Vol. 5

Add/Drop Measurement (this manual)

Describes the contents of screens, operation procedures and remote control for the generation and analysis of Add/Drop measurement.

Vol. 6

Jitter/Wander Measurement

Describes the contents of screens, operation procedures and remote control for the generation and analysis of Jitter (TX)/Frequency offset and Jitter (RX).

Vol. 7

2.5G Jitter/Wander Measurement

Describes the contents of screens, operation procedures and remote control for the generation and analysis of 2.5G Jitter (TX)/Frequency offset and Jitter (RX).

About This Manual

This Operation Manual describes the following.

This manual (MP1570A Operation Manual Vol.5 Add/Drop Measurement) mainly describes the contents of screens, operation procedures and remote control for the generation and analysis of Add/Drop measurement.

Screen Names

MP1570A has 4 major screens, namely, 'Setup', 'Test menu', 'Result', and 'Analyze', and each major screen has its own subscreens. (For details, see ‘Section 4 Screens and Parameter Setting’).

If 'Setup' is selected as the main screen and 'Mapping' as the subscreen, see 'Setup: Mapping’ screen in the manual for the explanation.

CONTENTS

Section 1 General

This section describes the outline of Add/Drop function which is enable when the MP0131A Add/Drop unit is installed on MP1570A.

1.1 Product Outline

When an MP0131A Add/Drop unit is installed, the MP1570A SONET/SDH/PDH/ATM analyzer can add the PDH/DSn signals to SDH/SONET mapping and drop the PDH/DSn signals from the SDH/SONET mapping described as follows.

Add Function

The MP0131A unit can add 1.5M/2M/34M/45M/139M PDH/DSn signals to 52M/156M/622M/2488M/9953M SDH/SONET mapping.

Drop Function

The MP0131A unit can drop 1.5M/2M/34M/45M/139M PDH/DSn signals from 52M/156M/622M/2488M/9953M SDH/SONET mapping signals.

1.2 Panel Description of MP0131A

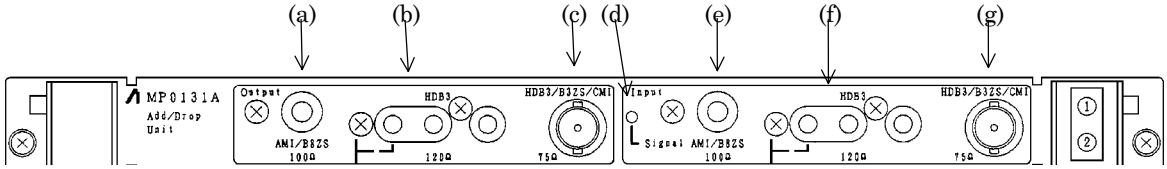

.	Label	Description
(a)	AMI/B8ZS 100Ω	Connector which outputs a 1.5M signal Bit rate : 1.544Mbit/s Code : AMI/B8ZS Connector : BANTAM 100Ω (Balanced)
(b)	HDB3 120Ω	Connector which outputs a 2M signal Bit rate : 2.048Mbit/s Code : HDB3 Connector : 3 pin Siemens 120Ω (Balanced)
(c)	HDB3/B3ZS/CMI 75Ω	Connector which outputs 2M, 34M, 45M, and 139M signals. Bit rate : 2.048Mbit/s, 34.368Mbit/s, 44.736Mbit/s, 139.264Mbit/s Code : HDB3 (2M, 34M) B3ZS (45M) CMI (139M) Connector : BNC 75Ω (Unbalanced)
(d)	Signal	Signal Indicates that an Add input signal has been detected. When the Add input signal is detected, the lamp is illuminated.
(e)	AMI/B8ZS 100Ω	Connector which inputs a 1.5M signal. Bit rate : 1.544Mbit/s Code : AMI/B8ZS Interface : $3V_{OP}$-3dB to 2dB+0 to 655feet Connector : BANTAM 100Ω (Balanced)
(f)	HDB3 120Ω	Connector which inputs a 2M signal. Bit rate : 2.048Mbit/s Code : HDB3 Interface : $3V_{OP}$±3dB+cable loss 0 to 6 dB Connector : 3 pin Siemens 120Ω (Balanced)

.	Label	Description
(g)	HDB3/B3ZS/CMI 75Ω	Connector which inputs 2M, 34M, 45M, and 139M signals. Bit rate : 2.048Mbit/s, 34.368Mbit/s, 44.736Mbit/s, 139.264Mbit/s Interface : 2M : 2.37V_{OP}±3dB+cable loss 0 to 6 dB 34M : 1.0V_{OP}±3dB+cable loss 0 to 12 dB 45M : 0.91V_{OP}-6dB to 6dB+450 to 900feet 139M : 1.0V_{PP}±3dB+cable loss 0 to 12 dB Code : HDB3 (2M, 34M) B3ZS (45M) CMI (139M) Connector : BNC 75Ω (Unbalanced)

1.3 Unit Combinations

Insert the MP0131A Add/Drop unit to Slot 1 or 2. The measurable bit rate and mapping route are depend on the combination of inserted units. The table below lists the combinations of units required for Add/Drop-related measurement and the mounting slot positions to be used.

	No.	Plug-in unit				Interface unit		
		Slot 1	Slot 2	Slot 3	Slot 4-5	156M type	156M/622M type	none
	1	MP0121A	MP0131A	*1	*2	○	○	○
*3	2	MP0131A	MP0122A/B	*1	*2	○	○	○
*3	3	MP0131A	—	*1	*2	○	○	×
*3	4	MP0131A	2.5G Unit	*4	*5	○	○	○
	5	MP0131A	MU150002A	MU150001A/B	MU150000A	○	○	○

○ .....Indicates that can be installed with combination.

× .....Indicates that cannot be installed with combination.

Note the following generic designations in the above table:

MP0121A ..... MP0121A 2/8/34/139/156M(CMI) unit

MP0122A ..... MP0122A 1.5/45/52M unit

2.5G Unit MU150008A, MU150009A, MU150010A
MP0127A, MP0128A, MP019A 2.5G unit

MP0131A ..... MP0131A Add/Drop unit

156M type MP0105A

156M/622M type ..... MP0108A, MP0111A, MP0112A, and MP0113A

*1.....ATM unit is installed on Slot 3. This unit is combined as required for measurement.

*2.....Jitter units and 2.5G/10G unit are installed on Slot 4-5. These units are combined as required for measurement.

*3.....The units in Slot 1 and Slot 2 at combination can be reversed.

*4.....ATM and 2.5G Jitter units are installed on Slot 3. When ATM and 2.5G Jitter units are installed, the measurable bit rate and mapping route are not affected. These units are combined as required for measurement.

*5.....Jitter units are installed on Slot 4-5. These units are combined as required for measurement.

Measurable bit rate and mapping route for combination No.1

In SDH mode

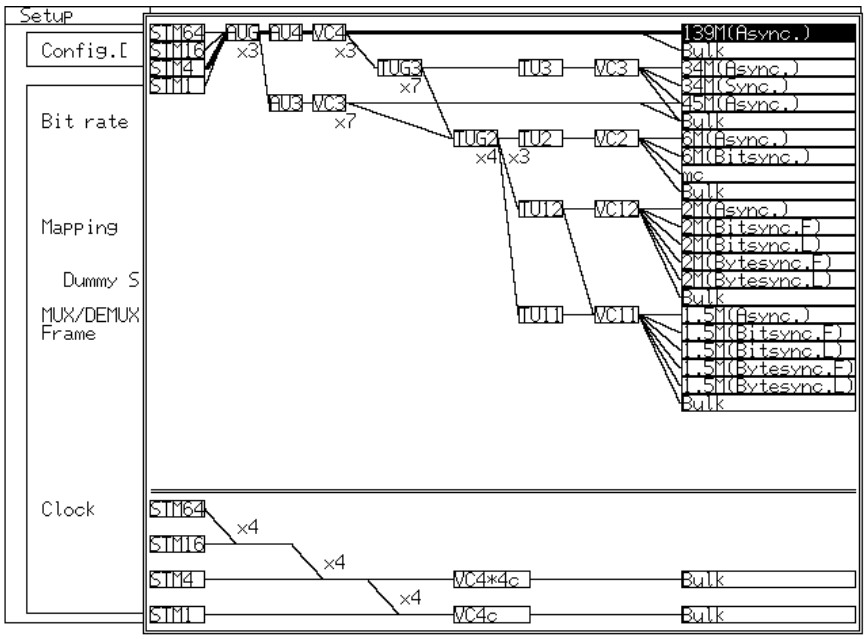

In SONET mode

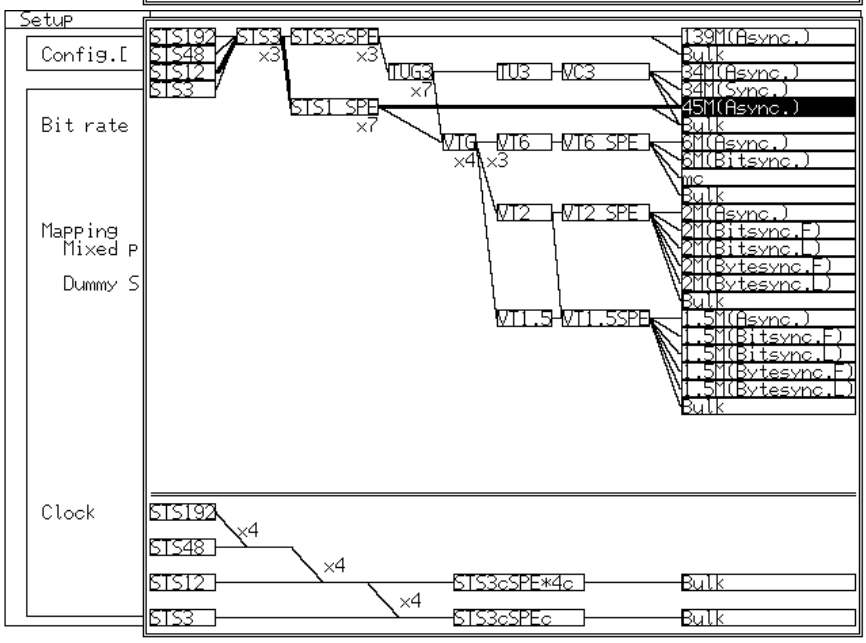

Note

- STM4/STS12 is measurable only when 156/622M interface unit is installed.
- STM16/STS48 is measurable only when 2.5G unit or 2.5G/10G unit is installed.
- STM64/STS192 is measurable only when 2.5G/10G unit is installed.

Measurable bit rate and mapping route for combination No.2

In SDH mode

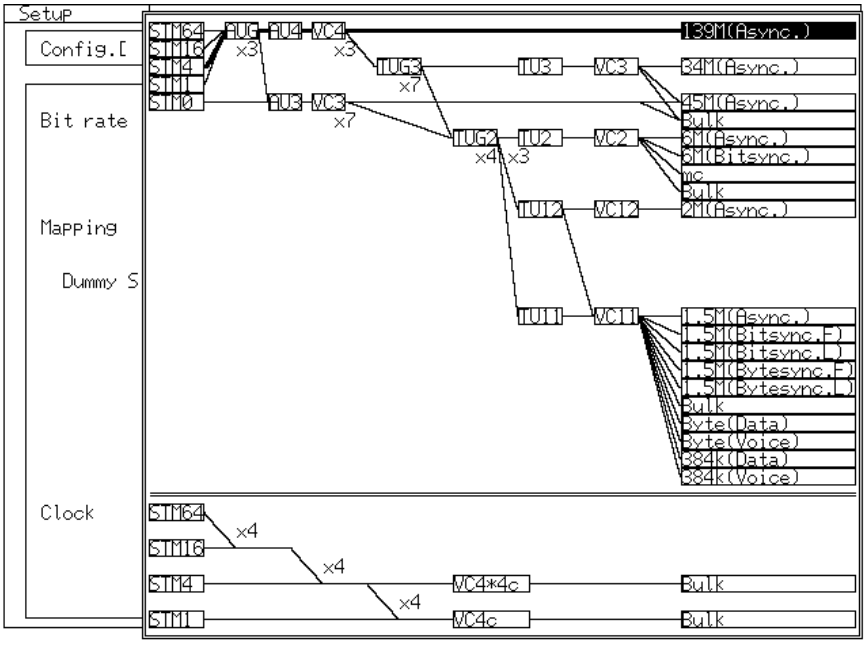

In SONET mode

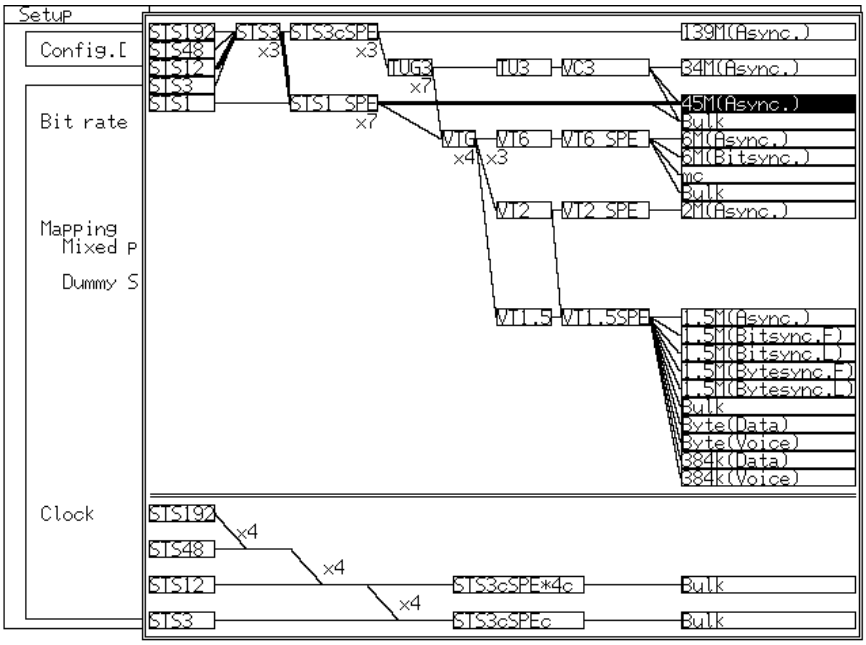

Note

- STM1/STS3 is measurable only when 156M or 156/622M interface unit is installed.
- STM4/STS12 is measurable only when 156/622M interface unit is installed.
- STM16/STS48 is measurable only when 2.5G unit or 2.5G/10G unit is installed.
- STM64/STS192 is measurable only when 2.5G/10G unit is installed.

Measurable bit rate and mapping route for combination No.3

In SDH mode

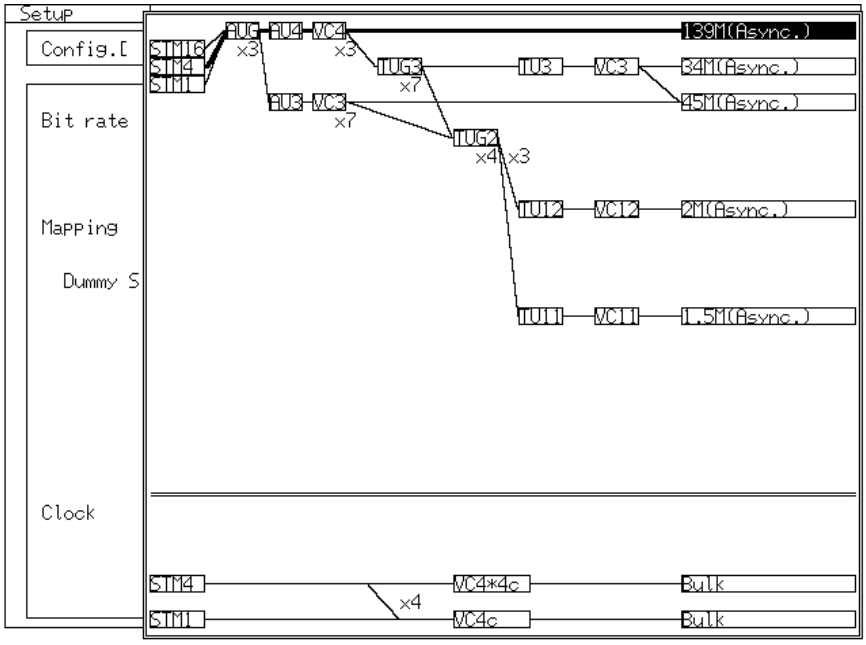

In SONET mode

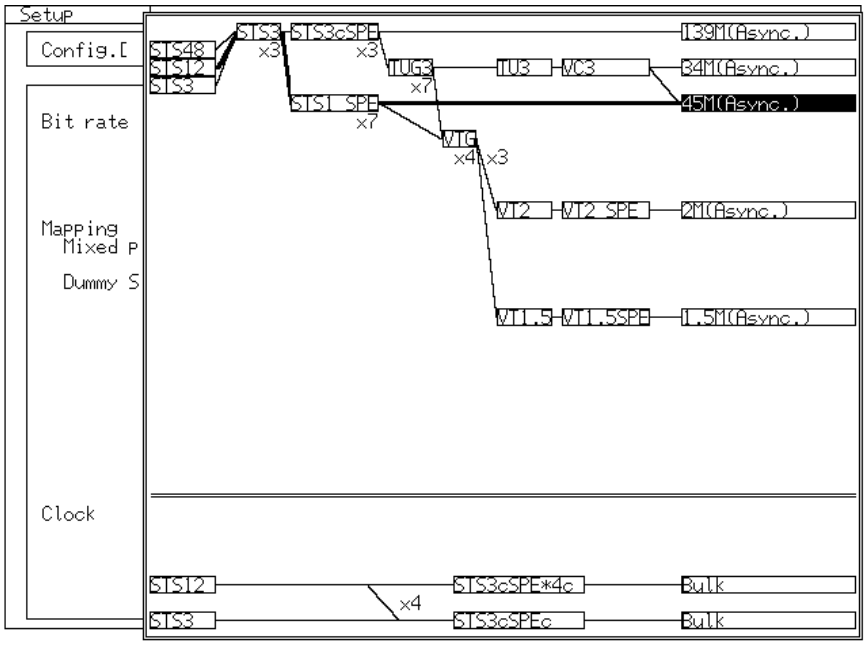

Note

- STM1/STS3 is measurable only when 156M or 156/622M interface unit is installed.
- STM4/STS12 is measurable only when 156/622M interface unit is installed.
- STM16/STS48 is measurable only when 2.5G unit or 2.5G/10G unit is installed.
- STM64/STS192 is measurable only when 2.5G/10G unit is installed.

Measurable bit rate and mapping route for combination No.4

In SDH mode

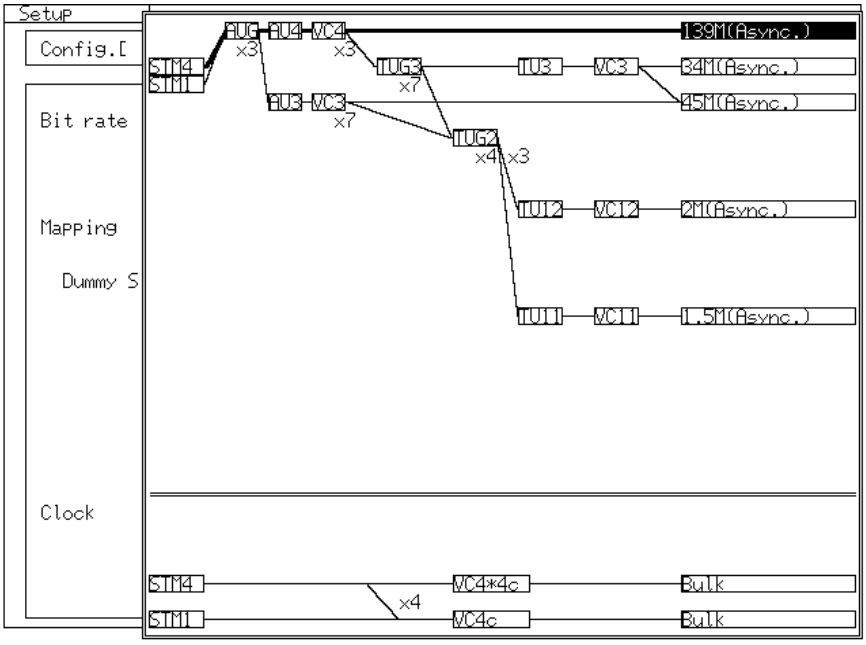

In SONET mode

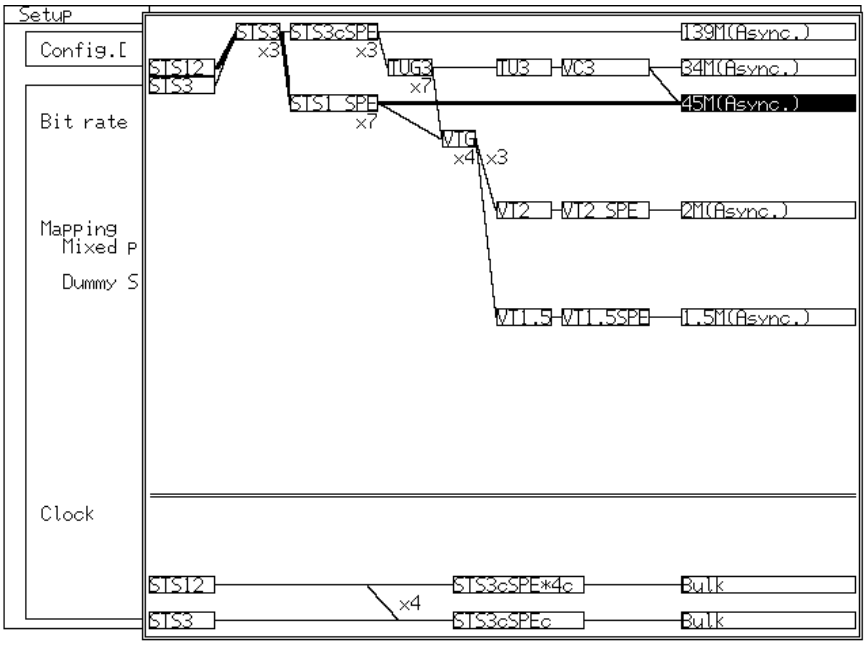

Note

- STM1/STS3 is measurable only when 156M or 156/622M interface unit is installed.
- STM4/STS12 is measurable only when 156/622M interface unit is installed.
- STM16/STS48 is measurable only when 2.5G unit or 2.5G/10G unit is installed.

Measurable bit rate and mapping route for combination No.5

In SDH mode

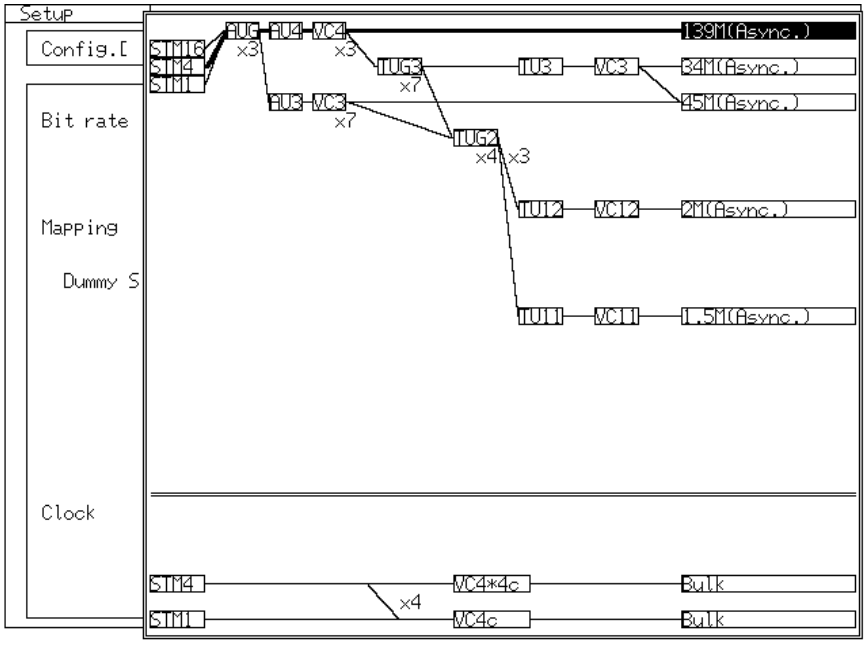

In SONET mode

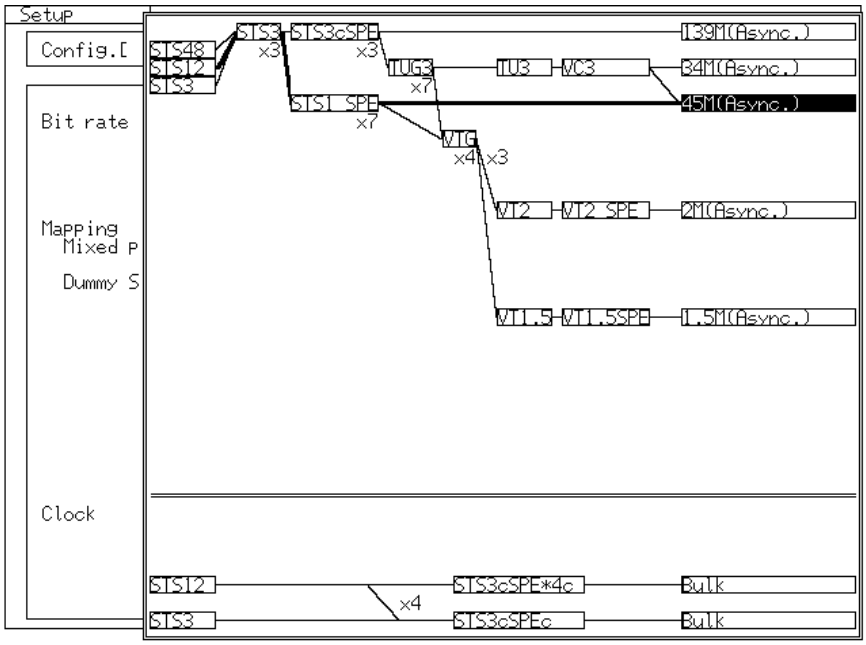

Note

- STM1/STS3 is measurable only when 156M or 156/622M interface unit is installed.
- STM4/STS12 is measurable only when 156/622M interface unit is installed.
- STM16/STS48 is measurable only when 2.5G unit or 2.5G/10G unit is installed.

Section 2 Description of Screens

This section describes the composition and displays of the screen when MP0131A Add/Drop unit is installed on MP1570A.

2.1 Screen Composition

The compositions of the main screen and subscreen when MP0131A is installed on MP1570A are as listed in the following table.

Subscreens of 'Setup' Main Screen

Display	Description
Mapping	Selects the type of signal, the interface, and measurement conditions, according to the measured item,.
Memory	Saves and retrieves the measurement condition data and graphic data on the Analyze screen.
Print	Sets the printing conditions.
OH preset data	Presets the overhead conditions of send signal.
Tandem	Sets the tandem connection measurement.
Dummy preset	Sets the dummy channel.
APS program data	Sets the APS (Automatic Protection Switch) measurement of transmission line.
System	Sets the buzzer, clock, screen color, GPIB and RS-232C.
Floppy disk	Saves the measurement conditions data and graphic data of Analyze main screen in the floppy disk, retrieves them from the disk.
Custom function	Sets specific functions that cannot be set on other screens.
Measurement condition	Sets the error and alarm detection release conditions, tandem connection conditions and performance measurement conditions.
PTR64 frame	Sets the pointer value to generate 64 frames of SDH/SONET pointer.
OH change data	Presets the OH change data pattern of the SDH/SONET OH test function.
Frame memory	Sets the frame memory to be sent.
Signaling preset	Sets the signaling data.
Selftest	Performs the self test.
Auto setup	Automatically sets the bit rate according to the input signal.

Subscreens of 'Test menu' Main Screen

Display	Description
Trouble search	Sets the measurement conditions of trouble search.
Manual	Sets the conditions of manual measurement.
Pointer sequence	Sets the type and time interval of pointer sequence measurement.
Delay	Sets the conditions of delay measurement.
OH test	Sets the conditions of overhead test.
APS test	Sets the APS test conditions.
Performance check	Sets the performance check conditions.
Frame memory	Sets the frame transmission conditions.

Subscreens of 'Result' Main Screen

Display	Description
Trouble search	Displays the trouble search measurement results.
Error / Alarm	Displays the error and alarm measurement results.
Justification	Displays the justification measurement results.
Zoom	Zooms up the error and alarm measurement results.
Performance	Displays the performance measurement results.
B2 error	Displays the B2 measurement results.
Simultaneous	Displays the simultaneous errors and alarms measurement results of VT6 SPE(7ch), VT2 SPE(21ch) and VT1.5 SPE(28ch) of TUG3 or STS1 SPE.
Delay	Displays the delay measurement results.
APS test	Displays the APS test measurement results.
Recall	Displays the automatic measurement results.

Subscreens of 'Analyze' Main Screen

Display	Description
Trouble search	Analyzes the trouble search measurement result.
Error / Alarm	Displays the error and alarm measurement result on graphs.
OH monitor	Displays the overhead monitor result together with the path trace, payload, pointer value, and K1/K2 byte monitor result.
Opt. power meter	Displays the power monitor, wavelength setting and optical power of the optical signal.
Pointer monitor	Monitors the SDH/SONET pointer value.
Sequence test	Analyzes the automatic measurement result.
APS capture	Set the capturing of K1/K2 byte used in the APS test, and analyzes it.
OH capture	Set the capturing of 1,023 bytes of SDH/SONET overhead, and analyzes it.
Frame capture	Set the capturing of SDH/SONET framed, and displays the result.
Recall	Displays the graph data stored in the memory or floppy disk.

Note

Sets the Add/Drop function on to be performed on the Setup: Mapping screen. The displays of other screens are the same if the Add/Drop function is on or off. However, note the restrictions for the settings and measurement items of PDH/DSn, as described below:

- When the Add/Drop function is on, the PDH/DSn signal is input from an external device. So, the frame setting of the PDH/DSn signal and error/alarm addition for PDH/DSn (such as FAS, Bit etc.) cannot be performed.
- Since the Add/Drop unit has not the function to analyze the PDH/DSn signal; when the Drop function is on, it cannot performs the frame setting of the PDH/DSn signal and error/alarm measurement for PDH/DSn (such as FAS, Sync. Loss, Info. Bit etc.).

2.2 Setup : Mapping Screen

Use the mapping screen for determining initial measurement settings. When settings of this screen are changed during measurement, the measurement is restarted. Specify Tx&Rx for simultaneous settings of transmit and receive, or Tx/Rx for independent settings of transmit and receive.

For Tx&Rx and 2M mapping

Config. : SDH/PDH

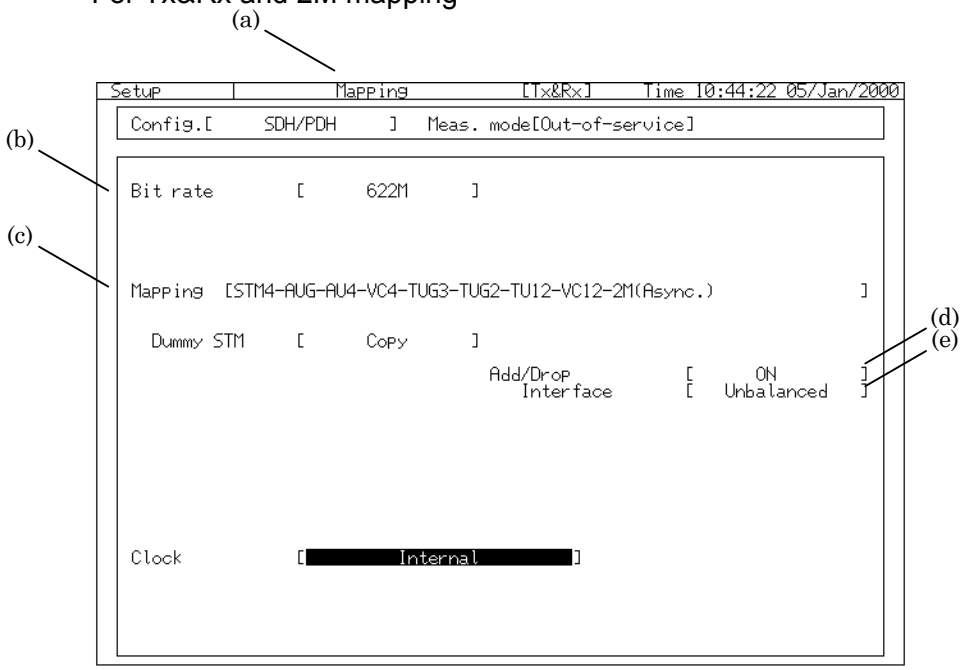

Config. : SONET/DSn

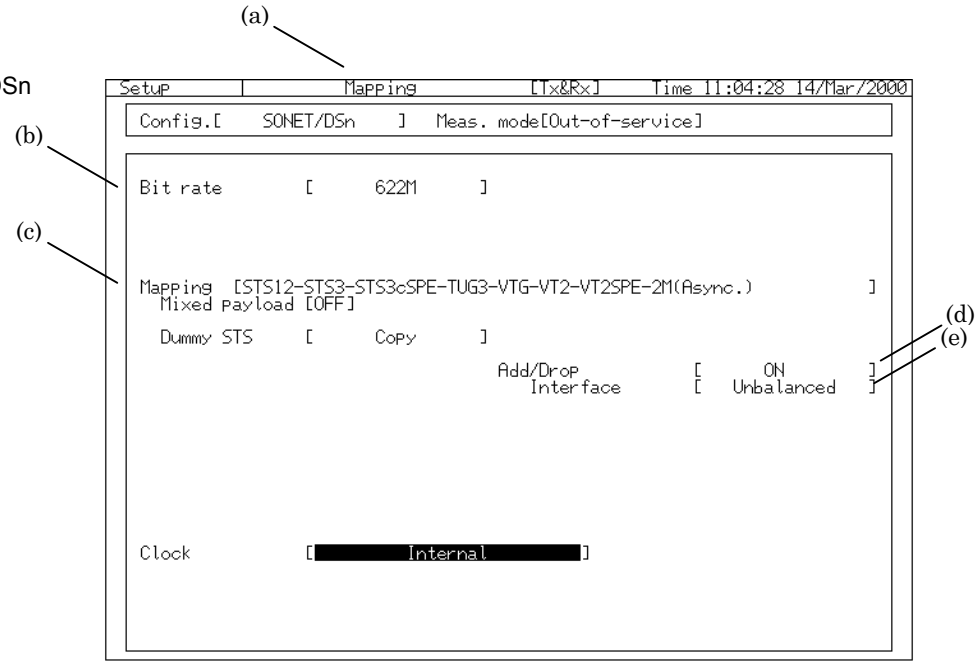

	Display	Description
(a)	[Selects a subscreen]	Selects a subscreen of Setup main screen. This is also used for selecting a desired subscreen of other main screens.
(b)	Bit rate	Selects a bit rate for transmission/reception.
(c)	Mapping	Selects a mapping type. The mapping item that can be selected depends on the units installed. For details, see paragraph 1.3, "Unit Combinations."
(d)	Add/Drop	Specifies whether Add/Drop function is On/Off. Add/Drop can be performed only when 139M (Async.), 45M (Async.), 34M (Async.), 2M (Async.), and TU11-VC11-1.5M (Async.) are selected for mapping.
(e)	Interface	Sets the input connector for Add signal when at 2M (Async.) mapping.

For Tx&Rx and 1.5M/45M mapping

Config. : SDH/PDH

```
Setup        Mapping        [Tx&Rx]    Time 10:46:45 05/Jan/2000
Config.[    SDH/PDH    ]  Meas. mode[Out-of-service]

Bit rate        [     156M     ]

Mapping  [STM1-AUG-AU4-VC4-TUG3-TUG2-TU11-VC11-1.5M(Async.)          ]

  Dummy STM     [     Copy     ]
                                  Add/Drop          [     ON       ]  (a)
                                     DSX            [    655ft     ]  (b)
                                     Code           [    B8ZS      ]

Clock           [          Internal          ]
```

Config. : SONET/DSn

```
Setup        Mapping        [Tx&Rx]    Time 11:06:57 14/Mar/2000
Config.[    SONET/DSn    ]  Meas. mode[Out-of-service]

Bit rate        [     156M     ]

Mapping  [STS3-STS3-STS3cSPE-TUG3-VTG-VT1.5-VT1.5SPE-1.5M(Async.)    ]
  Mixed Payload [OFF]
  Dummy STS     [     Copy     ]
                                  Add/Drop          [     ON       ]  (a)
                                     DSX            [     0ft      ]  (b)
                                     Code           [    B8ZS      ]

Clock           [          Internal          ]
```

.	Display	Description
(a)	Drop DSX	Sets DSX of Drop signal when at 1.5M (Async.) or 45M (Async.) mapping.
(b)	Code	Set the code of Drop signal at 1.5M (Async) mapping.

For Tx/Rx

Config. : SDH/PDH

```
Setup          Mapping          [Tx/Rx]     Time 10:49:15 05/Jan/2000
Config.[     SDH/PDH     ]   Meas. mode[Out-of-service]

Tx Bit rate     [      622M      ]
Mapping  [STM4-AUG-AU4-VC4-TUG3-TUG2-TU12-VC12-2M(Async.)              ]

  Dummy STM     [      Copy      ]
                                    Add                 [      ON        ]
                                       Interface        [   Unbalanced   ]

Clock           [         Internal         ]

Rx Bit rate     [      156M      ]

Mapping  [STM1-AUG-AU4-VC4-TUG3-TUG2-TU11-VC11-1.5M(Async.)            ]
                                    Drop                [      ON        ]
                                       DSX              [     655ft      ]
                                       Code             [     B8ZS       ]
```

Config. : SONET/DSn

```
Setup          Mapping          [Tx/Rx]     Time 11:09:12 14/Mar/2000
Config.[    SONET/DSn    ]   Meas. mode[Out-of-service]

Tx Bit rate     [      622M      ]
Mapping  [STS12-STS3-STS3cSPE-TUG3-VTG-VT2-VT2SPE-2M(Async.)           ]
  Mixed Payload [OFF]
  Dummy STS     [      Copy      ]
                                    Add                 [      ON        ]
                                       Interface        [   Unbalanced   ]

Clock           [         Internal         ]

Rx Bit rate     [      156M      ]

Mapping  [STS3-STS3-STS3cSPE-TUG3-VTG-VT1.5-VT1.5SPE-1.5M(Async.)      ]
                                    Drop                [      ON        ]
                                       DSX              [     655ft      ]
                                       Code             [     B8ZS       ]
```

Use the upper half of the screen for settings related to transmit; and use the lower half for those related to receive. The contents of items indicated are identical to those of Tx&Rx.

Section 3 Measurement (Measurement using PDH/DSn Measurement Instruments)

This section explains an example of measuring an Add/Drop-ed signal, and measuring the signal by using a PDH measuring instrument. The PDH signal mapped in SDH can be analyzed by other externally connected PDH analyzer.

3.1 Adding PDH/DSn Signal

3.1.1 Connection of the Measurement System

This section explains an connecting example and an initial setting example when 1.5M PDH/DSn signal which is generated by an external PDH/DSn measurement instrument is added to 2488M signal.

(1) Turn off the power switch of MP1570A.

(2) Install the MU150010A 2.5G(1.31/1.55) unit on MP1570A.

(3) Install the MP0131A Add/Drop unit on MP1570A.

(4) Connect the Output connector of PDH measurement instrument and AMI/B8ZS Input connector of MP0131A with a 100Ω BANTAM cable.

(5) Connect the Optical 1.55um Output connector of MU150010A and the Input connector of NE.

(6) After completion of connection, turn on the power switch of MP1570A.

Note

Install interface units and plug-in units according to the bit rate and interface to be measured. Refer to "1.3 Unit Combination" for the unit combination.

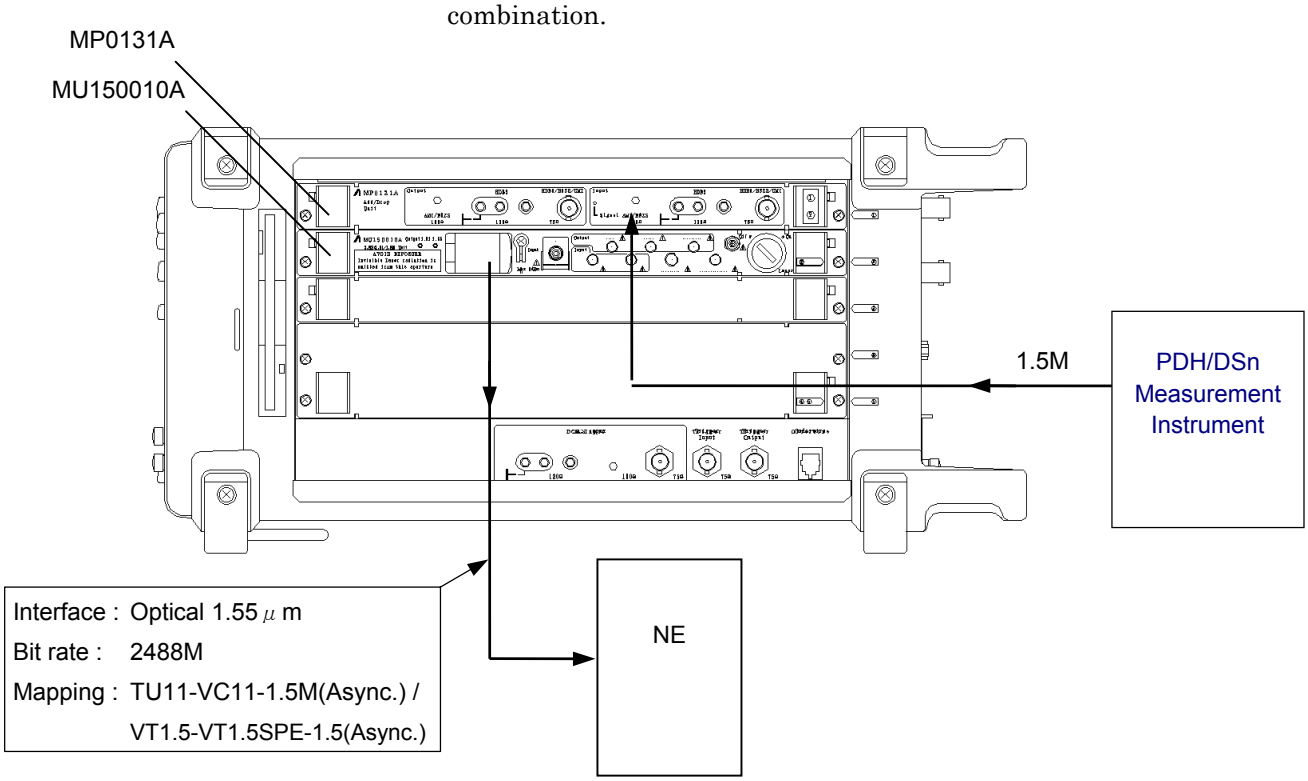

3.1.2 Initial Setting

(1) Basic parameters, such as the bit rate and mapping of the send signal, are set on the Setup : Mapping screen. In the following screen example, the receive signal and the send signal are set separately (Tx/Rx), and mapping is set to TU11-VC11-1.5M(Async.)/VT1.5- VT1.5SPE-1.5(Async.). Set Add to "ON".

In SDH mode

```
Setup          Mapping          [Tx/Rx]     Time 12:49:52 21/Feb/2000
 Config.[     SDH/PDH     ]   Meas. mode[Out-of-service]

 Tx Bit rate     [     2488M      ]                    [ 1.55μm Optical ]
 Mapping  [STM16-AUG-AU4-VC4-TUG3-TUG2-TU11-VC11-1.5M(Async.)          ]

   Dummy STM     [      Copy      ]
                                      Add                [      ON       ]


 Clock           [         Internal         ]

 Rx Bit rate     [     2488M      ]                    [    Optical     ]
                                      Bandwidth          [     Narrow     ]
 Mapping  [STM16-AUG-AU3-VC3-TUG2-TU11-VC11-1.5M(Async.)               ]
                                      Drop               [      ON        ]
                                         DSX             [      0ft       ]
                                         Code            [      B8ZS      ]
```

In SONET mode

```
Setup          Mapping          [Tx/Rx]     Time 11:18:01 14/Mar/2000
 Config.[    SONET/DSn    ]   Meas. mode[Out-of-service]

 Tx Bit rate     [     2488M      ]                    [ 1.55μm Optical ]
 Mapping  [STS48-STS3-STS3cSPE-TUG3-VTG-VT1.5-VT1.5SPE-1.5M(Async.)    ]

   Dummy STS     [      Copy      ]
                                      Add                [      ON       ]


 Clock           [         Internal         ]

 Rx Bit rate     [     2488M      ]                    [    Optical     ]
                                      Bandwidth          [     Narrow     ]
 Mapping  [STS48-STS3-STS1SPE-VTG-VT1.5-VT1.5SPE-1.5M(Async.)          ]
                                      Drop               [      ON        ]
                                         DSX             [      0ft       ]
                                         Code            [      B8ZS      ]
```

(2) An channel to add PDH/DSn signal is set on the Mapping screen. The Mapping screen is displayed when any main screen other than the Setup main screen (Test menu main screen, Result main screen, and Analyze main screen), 2-divided screen, or 3-divided screen is selected.

In SDH mode

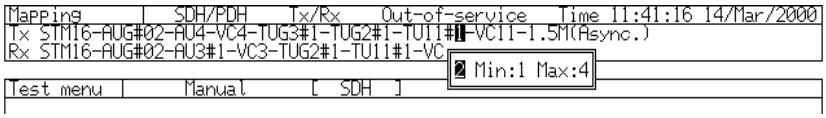

In SONET mode

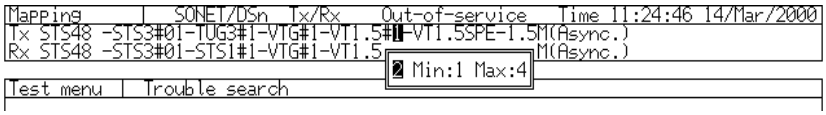

Note

To Add PDH/DSn signal, Mapping must be set to 139M (Async.), 45M (Async.), 34M (Async.), 2M (Async.), or TU11-VC11/VT1.5-VT1.5SPE-1.5(Async.).

3.2 Dropping PDH/DSn Signal

3.2.1 Connection of the Measurement System

This section provides a connecting example and an initial setting example when PDH/DSn signal is dropped from SDH/SONET 622M signal in which PDH/DSn 139M signal is multiplexed.

(1) Turn off the power switch of MP1570A.

(2) Install the MP0133A Optical Interface unit on MP1570A.

(3) Install the MP0131A Add/Drop unit on MP1570A.

(4) Connect HDB3/B3ZS/CMI Output connector of the MP0131A and the input connector of PDH/DSn measurement instrument with a 75Ω BNC cable.

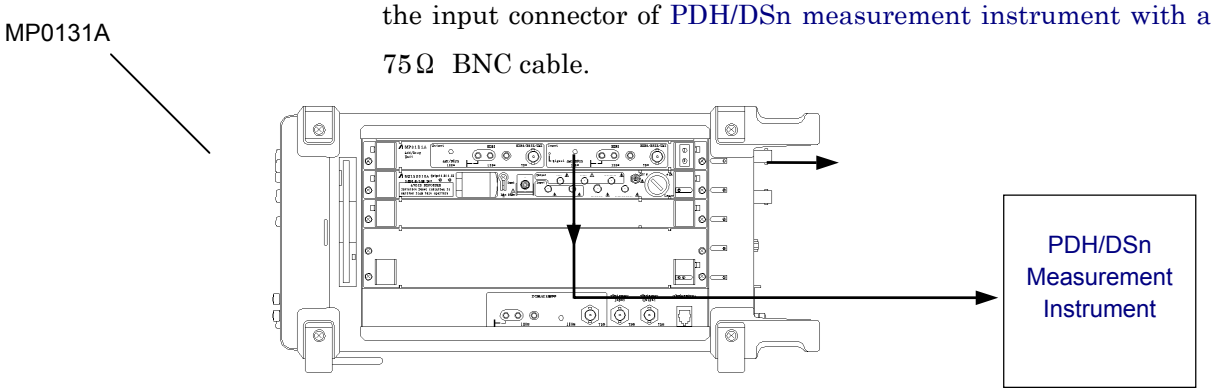

(5) Connect the output connector of NE and the Optical Input of the MP0113A.

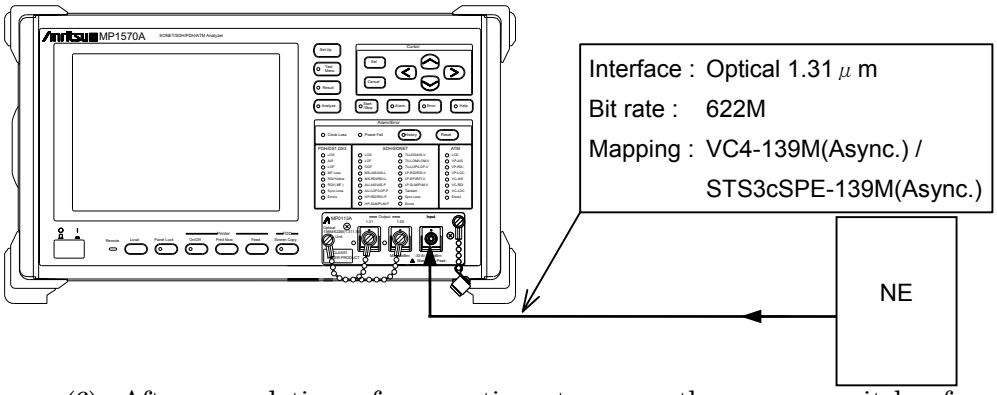

(6) After completion of connection, turn on the power switch of MP1570A.

Note

Install interface units and plug-in units according to the bit rate and interface to be measured. Refer to "1.3 Unit Combination" for the unit combination.

3.2.2 Initial Setting

(1) Basic parameters, such as the bit rate and mapping of the send signal, are set on the Setup : Mapping screen. In the following screen example, the receive signal and the send signal are set simultaneously (Tx&Rx), and mapping is set to VC4-139M(Async.)/STS3cSPE-139M(Async.). Set Add/Drop to "ON".

In SDH mode

```
Setup          Mapping          [Tx&Rx]     Time 10:56:32 05/Jan/2000
Config.[     SDH/PDH     ]   Meas. mode[Out-of-service]

Bit rate        [      622M      ]

Mapping  [STM4-AUG-AU4-VC4-139M(Async.)                              ]
  Dummy STM     [      Copy      ]
                                   Add/Drop          [      ON       ]

Clock           [          Internal          ]
```

In SONET mode

```
Setup          Mapping          [Tx&Rx]     Time 11:20:08 14/Mar/2000
Config.[     SONET/DSn     ]   Meas. mode[Out-of-service]

Bit rate        [      622M      ]

Mapping  [STS12-STS3-STS3cSPE-139M(Async.)                           ]
  Dummy STS     [      Copy      ]
                                   Add/Drop          [      ON       ]

Clock           [          Internal          ]
```

(2) An channel to add PDH/DSn signal is set on the Mapping screen. The Mapping screen is displayed when any main screen other than the Setup main screen (Test menu main screen, Result main screen, and Analyze main screen), 2-divided screen, or 3-divided screen is selected.

In SDH mode

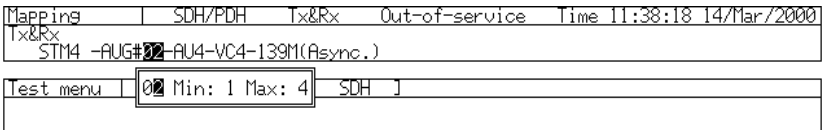

In SONET mode

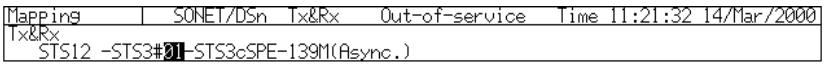

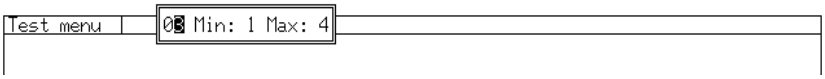

Note

To Add PDH/DSn signal, Mapping must be set to 139M (Async.), 45M (Async.), 34M (Async.), 2M (Async.), or TU11-VC11/VT1.5-VT1.5SPE-1.5(Async.).

3.3 Measurement and Analysis

This section provides the procedure for measuring and analyzing the error and alarm of the added or dropped SDH/SONET signal.

- Error and alarm can not be added to PDH/DSn signal to be added.
- Error and alarm of the dropped PDH/DSn signal can not be measured.
- This section provides the procedure for the basic measurement of SDH/SONET signal. For the details, refer to "Section 5 Application Examples and Basic Setting", "Section 6 Other Setting about the Measurement", and "Section 7 Measurement and Analysis" of MP1570A Operation Manual Vol.1 Basic Operation.

3.3.1 Start of Settings and Measurement

(1) Open the Test menu : Manual screen.

In SDH mode

```
Mapping        |  SDH/PDH    Tx&Rx    Out-of-service   Time 11:09:30 05/Jan/2000
Tx&Rx
   STM4 -AUG#01-AU4-VC4-139M(Async.)
```

```
Test menu |      Manual      [  SDH  ]


 Alarm     [ MS-AIS  ][  Single  ]

 Error     [   B1    ][   1E-4   ]

 K1 Bit1-4 [0000, No request      ]
    Bit5-8 [0001, Working #1      ]
 K2 Bit1-4 [0001, Working #1      ]
    Bit5-8 [1, 1:N  ] [  000, Idle  ]

 PTR    AU [0110 10][1000]



 Mode      [Repeat ] [ 1][ s ]

 PRG start [OFF]
```

In SONET mode

```
Mapping        |  SONET/DSn  Tx&Rx    Out-of-service   Time 11:27:35 14/Mar/2000
Tx&Rx
   STS12 -STS3#01-STS3cSPE-139M(Async.)
```

```
Test menu |      Manual      [ SONET ]


 Alarm     [  AIS-L  ][   All    ]

 Error     [   B1    ][   1E-4   ]

 K1 Bit1-4 [0000, No request      ]
    Bit5-8 [0001, Working #1      ]
 K2 Bit1-4 [0001, Working #1      ]
    Bit5-8 [1, 1:N  ] [000]

 PTR    STS[0110 00][   0] [+PJC] [-PJC]



 Mode      [Repeat ] [ 1][ s ]

 PRG start [OFF]
```

(2) Select a channel on the Mapping screen (upper half of the screen).

(3) Set the measurement time in Mode item.

(4) Press [Start /Stop] to start measurement.

3.3.2 Display of the Measurement Results of Errors and Alarms

When Result : Error/Alarm screen is selected, the measurement results of error and alarm appears.

In SDH mode

```
Mapping        | SDH/PDH    Tx&Rx    Out-of-service    Time 11:11:33 05/Jan/2000
Tx&Rx
   STM4 -AUG#01-AU4-VC4-139M(Async.)

Result         Error/Alarm    Start  11:11:30 05/Jan/2000

   Alarm [Second ]  Error [ Count ]  Display data [Current]

   Section          HP(AU)                    PDH
P-fail        0 o AIS          0 o
LOS           0 o LOP          0 o
LOF           0 o RDI          0 o
OOF           0 o SLM          0 o
AIS           0 o
RDI           0 o
                  TIM          0 o
                  UNEQ         0 o
B1            0 o B3           0 o
B2            0 o
                  REI          0 o
```

In SONET mode

```
Mapping        | SONET/DSn  Tx&Rx    Out-of-service    Time 11:35:23 14/Mar/2000
Tx&Rx
   STS12 -STS3#01-STS3cSPE-139M(Async.)

Result         Error/Alarm    Start  11:29:01 14/Mar/2000

   Alarm [Second ]  Error [ Count ]  Display data [Current]

 Section/Line       STS Path                    DSn
P-fail        0 o AIS          0 o
LOS           0 o LOP          0 o
LOF           0 o RDI          0 o
OOF           0 o PLM          0 o
AIS           0 o
RDI           0 o
                  TIM          0 o
                  UNEQ         0 o
B1            0 o B3           0 o
B2            0 o
                  REI          0 o
```

- Error count indication or error rate can be selected.
- The intermediate results under measurement are indicated when Display data is set to Current.

3.3.3 Analysis

When Analyze: Error/Alarm screen is selected, the analyzed results of the measurement of error and alarm appear.

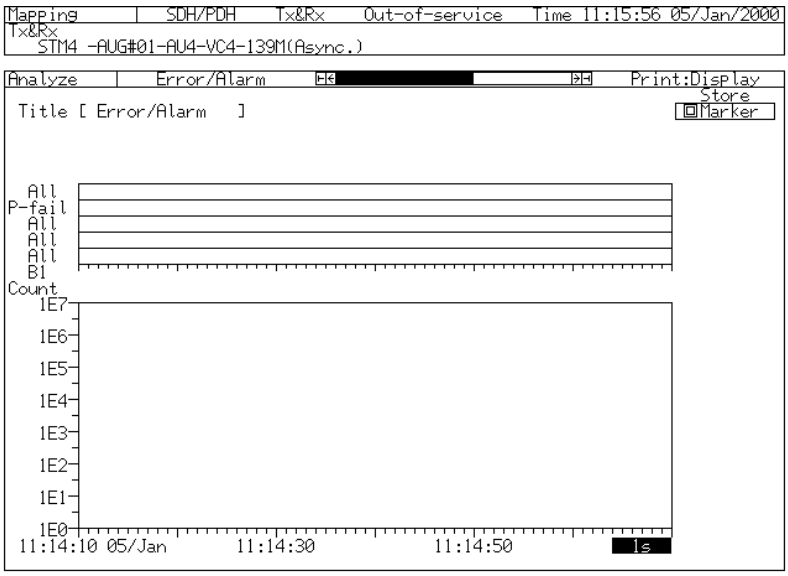

Note

Drawing an error/alarm graph stops when memory becomes full (Log memory full). Especially, if Graph resolution is set to 1 second, drawing the graph may stop before the graph is drawn for one screen.

Section 4 Remote Control

This section describes the remote control about Add/Drop measurement.

4.1 Remote Control

When the MP1570A SONET/SDH/PDH/ATM analyzer is connected to an external controller, measurement can be automated. The GP-IB, RS-232C, or Ethernet interface can be used for control. The MP1570A supports IEEE488.2 common commands that can be used for both interfaces. The Standard Commands for Programmable Instrument (SCPI) is used to execute remote control.

Refer to the MP1570A SONET/SDH/PDH/ATM Analyzer operation manual Vol.2 Remote Control for details about the above.

4.2 Equipment Unique Command

This section explains the remote commands of the Add/Drop function. Refer to the MP1570A SONET/SDH/PDH/ATM Analyzer operation manual Vol.2 Remote Control for details about other remote commands.

4.2.1 SOURce subsystem

The SOURce subsystem sets the transmitter.

Function	Command	Parameter	Page
Sets the bit rate of the transmission signal.	:SOURce:TELecom:BRATe	brate	4-6
Queries the bit rate of the transmission signal.	:SOURce:TELecom:BRATe?		4-6
Sets the SDH/SONET mapping route of the transmission signal.	:SOURce:TELecom:MAPPing:TYPE	mtype	4-7
Queries the SDH/SONET mapping route of the transmission signal.	:SOURce:TELecom:MAPPing:TYPE?		4-9
Selects the TU route of the SDH mapping route of the transmission signal.	:SOURce:TELecom:MAPPing:TU	ttype	4-9
Queries the selection of the SDH mapping route and TU route of the transmission signal.	:SOURce:TELecom:MAPPing:TU?		4-9
Selects the VT route of the SONET mapping route of the transmission signal.	:SOURce:TELecom:MAPPing:VT <vtype>	vtype	4-10
Queries the selection of the SONET mapping route and VT route of the transmission signal.	:SOURce:TELecom:MAPPing:VT?		4-10
Sets the channels at SDH/SONET points.	:SOURce:TELecom:MAPPing:ROUTe	route numeric	4-10
Queries the channels at the SDH/SONET points.	:SOURce:TELecom:MAPPing:ROUTe?	route	4-11

:SOURce:TELecom:BRATe <brate>

Parameter <brate> = <CHARACTER PROGRAM DATA>

M9953	9953Mbit/s
M2488	2488Mbit/s
M622	622Mbit/s
M156	156Mbit/s
M156CMI	156Mbit/s CMI
M52	52Mbit/s
M52B3ZS	52Mbit/s B3ZS
M139	139Mbit/s
M45	45Mbit/s
M34	34Mbit/s
M8	8Mbit/s
M2	2Mbit/s
M1_5	1.5Mbit/s

Function Sets the bit rate of the transmission signal.

Example use To set the bit rate of the transmission signal to 622 Mbit/s:

> :SOURce:TELecom:BRATe M622

:SOURce:TELecom:BRATe?

Response <brate> = <CHARACTER RESPONSE DATA>

Function Queries the bit rate of the transmission signal.

Example use > :SOURce:TELecom:BRATe?

< M622

:SOURce:TELecom:MAPPing:TYPE <mtype>

Parameter <mtype> = <CHARACTER PROGRAM DATA>

(SDH)

VC4_ASY	139M(Async.)
VC4_BLK	VC4(Bulk)
VC3_ASY	34M(Async.)
VC3_SYN	34M(Sync.)
VC3_45MASY	45M(Async.)
VC3_BLK	VC3(Bulk)
VC2_6MASY	6M(Async.)
VC2_6MBIT	6M(Bitsync.)
VC2_BLK	VC2(Bulk)
VC2_MC	VC2(mc)
VC12_ASY	2M(Async.)
VC12_BIF	2M(Bitsync.F)
VC12_BIL	2M(Bitsync.L)
VC12_BYF	2M(Bytesync.F)
VC12_BYL	2M(Bytesync.L)
VC12_BLK	VC12(Bulk)
VC11_ASY	1.5M(Async.)
VC11_BIF	1.5M(Bitsync.F)
VC11_BIL	1.5M(Bitsync.L)
VC11_BYF	1.5M(Bitsync.L)
VC11_BYL	1.5M(Bytesync.L)
VC11_BLK	VC11(Bulk)
VC11_BYD*1	Byte(Data)
VC11_BYV*1	Byte(Voice)
VC11_384D*1	384K(Data)
VC11_384V*1	384K(Voice)
VC4_64CBLK*2	VC4*64C(Bulk)
VC4_16CBLK*2	VC4*16C(Bulk)
VC4_4CBLK*2	VC4*4C(Bulk)
VC4_4CBLK*2	VC4C(Bulk)

(SONET)

ST3_ASY	139M(Async.)
ST3_BLK	ST3cSPE(Bulk)
VC3_45MASY	34M(Async.)
VC3_SYN	34M(Sync.)
STS1_ASY	45M(Async.)
STS1_BLK	STS1 SPE(Bulk)
VT6_ASY	6M(Async.)
VT6_BIT	6M(Bitsync.)
VT6_BLK	VT6 SPE(Bulk)
VT6_MC	VT6 SPE(mc)
VT2_ASY	2M(Async.)
VT2_BIF	2M(Bitsync.F)
VT2_BIL	2M(Bitsync.L)
VT2_BYF	2M(Bytesync.F)
VT2_BYL	2M(Bytesync.L)
VT2_BLK	VT2 SPE(Bulk)
VT15_ASY	1.5M(Async.)
VT15_BIF	1.5M(Bitsync.F)
VT15_BIL	1.5M(Bitsync.L)
VT15_BYF	1.5M(Bitsync.L)
VT15_BYL	1.5M(Bytesync.L)
VT15_BLK	VT1.5 SPE(Bulk)
VT15_BYD*1	Byte(Data)
VT15_BYV*1	Byte(Voice)
VT15_384D*1	384K(Data)
VT15_384V*1	384K(Voice)
STS3_64CBLK*2	STS3SPE*64C(Bulk)
STS3_16CBLK*2	STS3SPE*16C(Bulk)
STS3_4CBLK*2	STS3SPE*4C(Bulk)
STS3_CBLK*2	STS3SPEC(Bulk)

* : Valid when the option is installed.

Function Sets the SDH/SONET mapping route of the transmission signal.

Restriction Mapping may become invalid depending on the types of units to be inserted.

See Section “1.3 Unit Combinations" for details.

Add/Drop function becomes valid when VC4_ASY, VC3_ASY, VC3_45MASY, VC12_ASY, or VC11_ASY is specified for mapping.

Example use To set the mapping route of the transmission signal to 139M (Async.):

> :SOURce:TELecom:MAPPing:TYPE VC4_ASY

:SOURce:TELecom:MAPPing:TYPE ?

Response <mtype> = <CHARACTER RESPONSE DATA>

Function Queries the SDH/SONET mapping route of the transmission signal.

Example use > :SOURce:TELecom:MAPPing:TYPE ?

< VC4_ASY

:SOURce:TELecom:MAPPing:TU <ttype> (for SDH)

Parameter <ttype> = <CHARACTER PROGRAM DATA>

TU12

TU11

Function Selects the TU route of the SDH mapping route of the transmission signal.

Restriction Add/Drop function becomes valid when the TU route is set to TU11 with 1.5M (Async.) mapping.

Example use To set the SDH mapping route of the transmission signal to "via TU11":

> :SOURce:TELecom:MAPPing:TU TU11

:SOURce:TELecom:MAPPing:TU? (for SDH)

Response <ttype> = <CHARACTER RESPONSE DATA>

Function Queries the selection of the SDH mapping route and TU route of the transmission signal.

Example use > :SOURce:TELecom:MAPPing:TU?

< TU11

:SOURce:TELecom:MAPPing:VT <vtype> (for SONET)

Parameter <ttype> = <CHARACTER PROGRAM DATA>

TU12

TU11

Function Selects the VT route of the SONET mapping route of the transmission signal.

Restriction Add/Drop function becomes valid when the VT route is set to VT1.5 with 1.5M (Async.) mapping.

Example use To set the SONET mapping route of the transmission signal to "via VT1.5":

> :SOURce:TELecom:MAPPing:VT VT15

:SOURce:TELecom:MAPPing:VT? (for SONET)

Response <ttype> = <CHARACTER RESPONSE DATA>

Function Queries the selection of the SONET mapping route and VT route of the transmission signal.

Example use > :SOURce:TELecom:MAPPing:VT?

< VT15

:SOURce:TELecom:MAPPing:ROUTe <route>,<numeric>

Parameter <route> = <CHARACTER PROGRAM DATA>

(SDH)

AUG	AUG channel
AU3	AU3 channel
TUG3	TUG3 channel
TUG2	TUG2 channel
TU11	TU11 channel
TU12	TU12 channel
K384	384K channel
VC416C	VC4-16c channel
VC44C	VC4-4c channel
VC4C	VC4c channel

(SONET)

STS3	STS3 channel
STS1	STS1 channel
TUG3	TUG3 channel
VTG	VTG channel
VT2	VT2 channel
VT15	VT15 channel
K384	384K channel
STS316C	STS3cSPE*16c channel
STS34C	STS3cSPE*4c channel
STS3C	STS3cSPEc channel

<numeric> = <DECIMAL NUMERIC PROGRAM DATA>

1 to 4	<route> is AUG/STS3	Step 1
1 to 3	<route> is AU3/STS1	Step 1
1 to 3	<route> is TUG3	Step 1
1 to 7	<route> is TUG2/VTG	Step 1
1 to 4	<route> is TU11/VT2	Step 1
1 to 3	<route> is TU12/VT1.5	Step 1
1 to 4	<route> is K384	Step 1
1 to 4	<route> is VC416C or STS3cSPE*16C	Step 1
1 to 16	<route> is VC44C or STS3cSPE*4C	Step 1
1 to 64	<route> is VC4C or STS3cSPE*4C	Step 1

Function Sets the channels at SDH/SONET points.

Restriction This command is invalid in the following cases:

- The 622M- and 156M-type interface units are not installed; and <AUG> or <STS3> is set.
- The following table lists whether the channel can be set depending on the unit to be installed. ○ indicates that the channel can be set; × indicates that the channel cannot be set.

Unit / route	2/8/34/139/156M (CMI) Add/Drop	1.5/45/52M Add/Drop	Add/Drop
TU11	○	○	○
384k*	×	○	×

* : Valid when the option 09 is installed.

Example use To set the AUG channel to 4:

>:SOURce:TELecom:MAPPing:ROUTe AUG,4

:SOURce:TELecom:MAPPing:ROUTe? <route>

Parameter <route> = <CHARACTER PROGRAM DATA>

Response <numeric> = <NR1 NUMERIC RESPONSE DATA>

Function Queries the channels at the SDH/SONET points.

Example use > :SOURce:TELecom:MAPPing:ROUTe? AUG

< 4

4.2.2 SENSe subsystem

The SENSe subsystem sets the receiver and measurement conditions.

Function	Command	Parameter	Page
Sets the bit rate of the reception signal.	:SENSe:TELecom:BRATe	brate	4-13
Queries the bit rate of the reception signal.	:SENSe:TELecom:BRATe?		4-13
Sets the SDH/SONET mapping route of the reception signal.	:SENSe:TELecom:MAPPing:TYPE	mtype	4-14
Queries the SDH/SONET mapping route of the reception signal.	:SENSe:TELecom:MAPPing:TYPE?		4-16
Selects the TU route of SDH mapping route of the reception signal.	:SENSe:TELecom:MAPPing:TU	ttype	4-16
Queries the selection of the SDH mapping route and TU route of the reception signal.	:SENSe:TELecom:MAPPing:TU?		4-16
Selects the VT route of SONET mapping route of the reception signal.	:SENSe:TELecom:MAPPing:VT	ttype	4-17
Queries the selection of the SONET mapping route and VT route of the reception signal.	:SENSe:TELecom:MAPPing:VT?		4-17
Sets the channels at SDH/SONET points.	:SENSe:TELecom:MAPPing:ROUTe	route numeric	4-18
Queries the channels at the SDH/SONET points.	:SENSe:TELecom:MAPPing:ROUTe?	route	4-19

:SENSe:TELecom:BRATe <brate>

Parameter <brate> = <CHARACTER PROGRAM DATA>

M9953	9953Mbit/s
M2488	2488Mbit/s
M622	622Mbit/s
M156	156Mbit/s
M156CMI	156Mbit/s (CMI main frame built-in option)
M52B3ZS	52Mbit/sB3ZS
M139	139Mbit/s
M52	52Mbit/s
M45	45Mbit/s
M34	34Mbit/s
M8	8Mbit/s
M2	2Mbit/s
M1_5	1.5Kbit/s

Function Sets the bit rate of the reception signal.

Example use To set the bit rate of the reception signal to 622 Mbit/s:

> :SENSe:TELecom:BRATe M622

:SENSe:TELecom:BRATe?

Response <brate> = <CHARACTER RESPONSE DATA>

Function Queries the bit rate of the reception signal.

Example use > :SENSe:TELecom:BRATe?

< M622

:SENSe:TELecom:MAPPing:TYPE <mtype>

Parameter <mtype> = <CHARACTER PROGRAM DATA>

(SDH)

VC4_ASY	139M(Async.)
VC4_BLK	VC4(Bulk)
VC3_ASY	34M(Async.)
VC3_SYN	34M(Sync.)
VC3_45MASY	45M(Async.)
VC3_BLK	VC3(Bulk)
VC2_6MASY	6M(Async.)
VC2_6MBIT	6M(Bitsync.)
VC2_BLK	VC2(Bulk)
VC2_MC	VC2(mc)
VC12_ASY	2M(Async.)
VC12_BIF	2M(Bitsync.F)
VC12_BIL	2M(Bitsync.L)
VC12_BYF	2M(Bytesync.F)
VC12_BYL	2M(Bytesync.L)
VC12_BLK	VC12(Bulk)
VC11_ASY	1.5M(Async.)
VC11_BIF	1.5M(Bitsync.F)
VC11_BIL	1.5M(Bitsync.L)
VC11_BYF	1.5M(Bytesync.F)
VC11_BYL	1.5M(Bytesync.L)
VC11_BLK	VC11(Bulk)
VC11_BYD*1	Byte(Data)
VC11_BYV*1	Byte(Voice)
VC11_384D*1	384K(Data)
VC11_384V*1	384K(Voice)
VC4_64CBLK*2	VC4*64C(Bulk)
VC4_16CBLK*2	VC4*16C(Bulk)
VC4_4CBLK*2	VC4*4C(Bulk)
VC4_CBLK*2	VC4C(Bulk)

(SONET)

STS3_ASY	139M(Async.)
STS3_BLK	STS3cSPE(Bulk)
VC3_ASY	34M(Async.)
VC3_SYN	34M(Sync.)
STS1_45MASY	45M(Async.)
STS1_BLK	STS1 SPE(Bulk)
VT6_ASY	6M(Async.)
VT6_BIT	6M(Bitsync.)
VT6_BLK	VT6 SPE(Bulk)
VT6_MC	VT6 SPE(mc)
VT2_ASY	2M(Async.)
VT2_BIF	2M(Bytesync.F)
VT2_BIL	2M(Bitsync.L)
VT2_BYF	2M(Bytesync.F)
VT2_BYL	2M(Bytesync.L)
VT2_BLK	VT2 SPE(Bulk)
VT15_ASY	1.5M(Async.)
VT15_BIF	1.5M(Bitsync.F)
VT15_BIL	1.5M(Bitsync.L)
VT15_BYF	1.5M(Bytesync.F)
VT15_BYL	1.5M(Bytesync.L)
VT15_BLK	VT1.5 SPE(Bulk)
VT15_BYD*1	Byte(Data)
VT15_BYV*1	Byte(Voice)
VT15_384D*1	384k(Data)
VT15_384V*1	384k(Voice)
STS3_64CBLK*2	STS3CSPE*64C(Bulk)
STS3_16CBLK*2	STS3CSPE*16C(Bulk)
STS3_4CBLK*2	STS3CSPE*4C(Bulk)
STS3_CBLK*2	STS3CSPEC(Bulk)

*1 : Valid when the option 09 is installed.

*2 : Concatenation mapping

Function Sets the SDH/SONET mapping route of the reception signal.

Restriction Mapping may become invalid depending on the types of units to be installed.

See Section “1.3 Unit Combinations" for details.

Add/Drop function becomes valid when VC4_ASY, VC3_ASY, VC3_45MASY, VC12_ASY, or VC11_ASY is specified for mapping.

Example use To set the mapping route of the reception signal to 139M (Async.):

> :SENSe:TELecom:MAPPing:TYPE VC4_ASY

:SENSe:TELecom:MAPPing:TYPE?

Response <mtype> = <CHARACTER RESPONSE DATA>

Function Queries the SDH/SONET mapping route of the reception signal.

Example use > :SENSe:TELecom:MAPPing:TYPE?

< VC4_ASY

:SENSe:TELecom:MAPPing:TU <ttype> (for SDH)

Parameter <ttype> = <CHARACTER PROGRAM DATA>

TU12

TU11

Function Selects the TU route of SDH mapping route of the reception signal.

Restriction Add/Drop function becomes valid when the TU route is set to TU11 with 1.5M (Async.) mapping.

Example use To set the SDH mapping route of the reception signal to "via TU12":

> :SENSe:TELecom:MAPPing:TU TU12

:SENSe:TELecom:MAPPing:TU? (for SDH)

Response <ttype> = <CHARACTER RESPONSE DATA>

Function Queries the selection of the SDH mapping route and TU route of the reception signal.

Example use > :SENSe:TELecom:MAPPing:TU?

< TU12

:SENSe:TELecom:MAPPing:VT <ttype> (for SONET)

Parameter <ttype> = <CHARACTER PROGRAM DATA>

VT2

VT15

Function Selects the VT route of SONET mapping route of the reception signal.

Restriction Add/Drop function becomes valid when the VT route is set to VT1.5 with 1.5M (Async.) mapping.

Example use To set the SONET mapping route of the reception signal to "via VT1.5":

> :SENSe:TELecom:MAPPing:VT VT15

:SENSe:TELecom:MAPPing:VT? (for SONET)

Response <ttype> = <CHARACTER RESPONSE DATA>

Function Queries the selection of the SONET mapping route and VT route of the reception signal.

Example use > :SENSe:TELecom:MAPPing:VT?

< VT15

:SENSe:TELecom:MAPPing:ROUTe <route>,<numeric>

Parameter <route> = <CHARACTER PROGRAM DATA>

(SDH)

AUG	AUG channel
AU3	AU3 channel
TUG3	TUG3 channel
TUG2	TUG2 channel
TU11	TU11 channel
TU12	TU12 channel
K384	384K channel
VC416C	VC4_16c channel
VC44C	VC4_4c channel
VC4C	VC4_c channel

(SONET)

STS3	STS3 channel
STS1	AU3 channel
TUG3	TUG3 channel
VTG	VTG channel
VT2	VT2 channel
VT15	VT1.5 channel
K384	384k channel
STS316C	STS3cSPE*16c channel
STS34C	STS3cSPE*4c channel
STS3C	STS3cSPEc channel

<numeric> = <DECIMAL NUMERIC PROGRAM DATA>

1 to 64	<route> is AUG,STS3.	Step 1
1 to 3	<route> is AU3 or STS1SPE.	Step 1
1 to 3	<route> is TUG3.	Step 1
1 to 7	<route> is TUG2 or VTG.	Step 1
1 to 3	<route> is TU12 or VT2.	Step 1
1 to 4	<route> is TU11 or VT15.	Step 1
1 to 4	<route> is 384k.	Step 1
1 to 16	<route> is VC4_16c or STS3cSPE*16c.	Step 1
1 to 16	<route> is VC4_4c or STS3cSPE*4c.	Step 1
1 to 64	<route> is VC4_c or STS3cSPEc.	Step 1

Function Sets the channels at SDH/SONET points.

Restriction This command is invalid in the following cases:

- The 622M- and 156M-type interface units are not installed; and <AUG> or <STS3> is set.
- :SENSe:TELecom:BRATe is <M139>, <M45>, <M34>, <M8>, <M2>, or <M1_5>.
- The following table lists whether the channel can be set depending on the unit to be installed. ○ indicates that the channel can be set; × indicates that the channel cannot be set.

Unit / route	2/8/34/139/156M (CMI) Add/Drop	1.5/45/52M Add/Drop	Add/Drop
TU11	○	○	○
384k＊	×	○	×

* : Valid when the option 09 is installed.

Example use To set the AUG channel to 4:

> :SENSe:TELecom:MAPPing:ROUTe AUG,4

:SENSe:TELecom:MAPPing:ROUTe? <route>

Parameter <route> = <CHARACTER PROGRAM DATA>

Response <numeric> = <NR1 NUMERIC RESPONSE DATA>

Function Queries the channels at the SDH/SONET points.

Example use > :SENSe:TELecom:MAPPing:ROUTe? AUG

< 4

4.2.3 ROUTe subsystem

The ROUTe subsystem controls (i.e., sets and displays) the signal route in the measuring instrument.

Function	Command	Parameter	Page
Selects the Add function.	:ROUTe:ADD[:MODE]	boolean	4-21
Queries the setting status of the Add function.	:ROUTe:ADD[:MODE]?		4-21
Selects the Add (2M) signal input connector.	:ROUTe:ADD:INPut	port	4-21
Queries the Add (2M) signal input connector selection.	:ROUTe:ADD:INPut?		4-22
Selects the Drop function On/Off.	:ROUTe:DROP[:MODE]	boolean	4-22
Queries the setting status of the Drop function.	:ROUTe:DROP[:MODE] ?		4-22
Sets the DSX cable length for the Drop (1.5M, 45M) signal.	:ROUTe:DROP:DSX	numeric	4-23
Queries the Drop (1.5M, 45M) signal DSX cable length.	:ROUTe:DROP:DSX?		4-23
Selects the Drop (1.5M) signal code.	:ROUTe:DROP:CODE	code	4-24
Queries the Drop (1.5M) signal code.	:ROUTe:DROP:CODE?		4-24

:ROUTe:ADD[:MODE] <boolean>

Parameter <boolean> = <BOOLEAN PROGRAM DATA>

OFF or 0	Add OFF
ON or 1	Add ON

Function Selects the Add function.

Restriction This command is invalid in the following cases:

・The Add/Drop unit is not installed.

・:SOURce:TELecom:MAPPing:TYPE is other than <VC4_ASY>, <VC3_ASY>, <VC3_45MASY>, <VC12_ASY>, <VC11_ASY>, <STS3_ASY>, <STS1_45MASY>, <VT2_ASY>, and <VT15_ASY>; and <ON> is set.

・ç:SOURce:TELecom:MAPPing:TYPE is <VC11_ASY> and :SOURce:TELecom:MAPPing:TU is <TU12>; and <ON> is set.

・çSOURce:TELecom:MAPPing:TYPE is <VT15_ASY> and :SOURce:TELecom:MAPPing:VT is <VT2>; and <ON> is set.

Example use To use the Add function.

> :ROUTe:ADD ON

:ROUTe:ADD[:MODE]?

Response <boolean> = <NR1 NUMERIC RESPONSE DATA>

0	Add OFF
1	Add ON

Function Queries the setting status of the Add function.

Example use > :ROUTe:ADD?

< 1

:ROUTe:ADD:INPut <port>

Parameter <port> = <CHARACTER PROGRAM DATA>

PORT1	Unbalanced connector
PORT2	Balanced connector

Function Selects the Add (2M) signal input connector.

Restriction This command is invalid in the following cases:

・:INSTrument:CONFig is <ATM>.

・:SOURce:TELecom:MAPPing is other than <VC12_ASY> and <VT2_ASY>.

・:ROUTe:ADD[:MODE] is <OFF>.

Example use To set the input connector to Unbalanced.

>:ROUTe:ADD:INPut PORT1

:ROUTe:ADD:INPut?

Response <port> = <CHARACTER RESPONSE DATA>

Function Queries the Add (2M) signal input connector selection.

Example use >:ROUTe:ADD:INPut?

< PORT1

:ROUTe:DROP[:MODE] <boolean>

Parameter <boolean> = <BOOLEAN PROGRAM DATA>

OFF or 0	Drop OFF
ON or 1	Drop ON

Function Selects the Drop function On/Off.

Restriction This command is invalid in the following cases:

- Add/Drop unit is not installed.
- :SENSe:TELecom:MAPPing:TYPE is other than <VC4_ASY>, <VC3_ASY>, <VC3_45MASY>, <VC12_ASY>, <VC11_ASY>, <STS3_ASY>, <STS1_45MASY>, <VT2_ASY>, and <VT15_ASY>; and <ON> is set.
- :SENSe:TELecom:MAPPing:TYPE is <VC11_ASY> and :SENSe:TELecom:MAPPing:TU is <TU12>; <ON> is set.
- :SENSe:TELecom:MAPPing:TYPE is <VT15_ASY> and :SECSe:TELecom:MAPPing:VT is <VT2>; and <ON> is set.

Example use To use the Drop function.

> :ROUTe:DROP ON

:ROUTe:DROP[:MODE]?

Response <boolean> = <NR1 NUMERIC RESPONSE DATA>

0	Drop OFF
1	Drop ON

Function Queries the setting status of the Drop function.

Example use > :ROUTe:DROP?

< 1

:ROUTe:DROP:DSX <numeric>

Parameter <NUMERIC PROGRAM DATA>

0	0ft
450	450ft
655	655ft
900	900ft

Function Sets the DSX cable length for the Drop (1.5M, 45M) signal.

Restriction This command is invalid in the following cases:

- Add/Drop unit is not installed.
- :INSTrument:CONFig is <ATM>.
- :SENSe:TELecom:MAPPing:TYPE is <VC3_45MASY>, <VC11_ASY>, <STS1_45MASY>, and <VT15_ASY>.
- :ROUTe:DROP[:MODE] is <OFF>.

Example use To set the DROP (1.5M) signal DSX cable length to 450 ft.

> :ROUTe:DROP:DSX 450

:ROUTe:DROP:DSX?

Response <numeric> = <NR1 NUMERIC RESPONSE DATA>

Function Queries the Drop (1.5M, 45M) signal DSX cable length.

Example use > :ROUTe:DROP:DSX?

< 450

:ROUTe:DROP:CODE <code>

Parameter	<code> = <CHARACTER PROGRAM DATA> AMI B8ZS
Function	Selects the Drop (1.5M) signal code.
Restriction	This command is invalid in the following cases: ・Add/Drop unit is not installed. ・:INSTrument:CONFig is <ATM>. ・ :SENSe:TELecom:MAPPing:TYPE is other than <VC11_ASY> and <VT15_ASY>.
Example use	To set the Drop (1.5M) signal code to AMI. > :ROUTe:DROP:CODE AMI

:ROUTe:DROP:CODE?

Response	<code> = <CHARACTER RESPONSE DATA>
Function	Queries the Drop (1.5M) signal code.
Example use	>:ROUTe:DROP:CODE? < AMI

4.2.4 TEST subsystem

The TEST subsystem is used to display the results of the selftest.

Function	Command	Parameter	Page
Sets the Add/Drop to the test item of the main-frame function test.	:TEST:CONTent:ADRop	boolean	4-25
Queries the setting state of the Add/Drop in the main-frame function test.	:TEST:CONTent:ADRop?		4-25

:TEST:CONTent:ADRop <boolean>

Parameter <boolean> = <BOOLEAN PROGRAM DATA>

OFF or 0 Does not make the Add/Drop test.

ON or 1 Make the Add/Drop test.

Function Sets the Add/Drop to the test item of the main-frame function test.

Restriction This command is invalid in the following cases:

・:TEST:TYPE is other than <MFT>.

・:TEST:CONTent:TYPE is other than <ISEL>.

・Add/Drop unit is not installed.

Example use Sets the Add/Drop to the test item.

> :TEST:CONTent:ADRop ON

:TEST:CONTent:ADRop?

Response <boolean> = <NR1 RESPONSE DATA>

Function Queries the setting state of the Add/Drop in the main-frame function test.

Example use > :TEST:CONTent:ADRop?

< 1

Section 5 Performance Tests

This section describes the check procedure of selftest and output waveform of the MP0131A Add/Drop unit.

5.1 Selftest

The performance test of the MP0131A can be done by referring to the main-frame performance test described on the MP1570A SONET/SDH/PDH/ATM Analyzer operation manual Vol. 1.

The test procedure is described below.

(1) Open the Setup: Selftest subscreen:

(2) Move the cursor to "Type", and press [Set].

(3) An item selection window opens. Select "Main-frame test".

(4) According to the message displayed on the screen, connect the cables. Setup all the connectors of the MP0131A by looping back the output to the input.

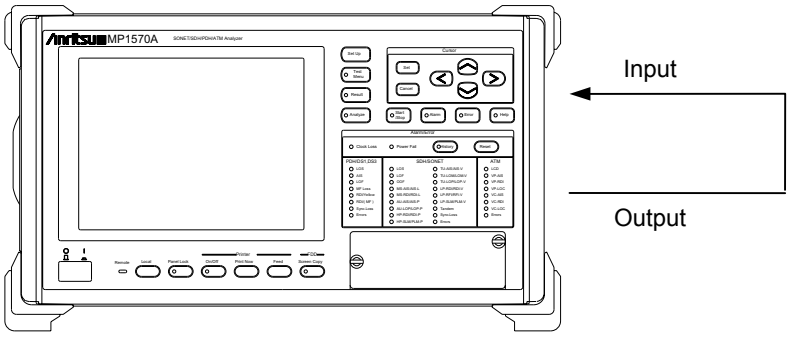

(5) Press [Start /Stop] to start selftest.

(6) When all of the check items are checked, test is completed automatically. The buzzer sounds, and the result of judgement is displayed on the screen.

PASS ..... Indicates that the result of selftest is normal.

FAIL ..... Indicates that the result of selftest is abnormal.

- If the built-in printer is on, the result of judgement is automatically printed.
- If the result of selftest is abnormal, an error code is displayed. For details of error codes, see "Appendix B Self-test error code list".

5.2 MP0131A Output Waveform

5.2.1 Connection and Test Procedure

This section describes the test of output waveforms at frequencies of 1.5M, 2M, 34M, 45M, and 139M. The output waveforms are tested as follows.

(1) Insert the MP0131A unit and Interface unit into MP1570A, and connect it according to the desired frequency and interface as shown in the figure below.
(2) Open the Setup: Mapping screen.
(3) Set the frequency and interface, and set the Drop to “ON”.
(4) Set the interface and mapping of the SDH/SONET measuring instrument to the same as those set at step (3) above.
(5) Check that the waveform displayed on the oscilloscope is within “5.2.2 Pulse mask".
(6) Repeat the steps (1) to (5) to test the waveforms on other frequencies and interfaces.

Note

The pulse mask shown in paragraph (2) does not consider the PAD attenuation amount. Verify the pulse mask level, considering the attenuation amount.

2M Balanced (HDB3)

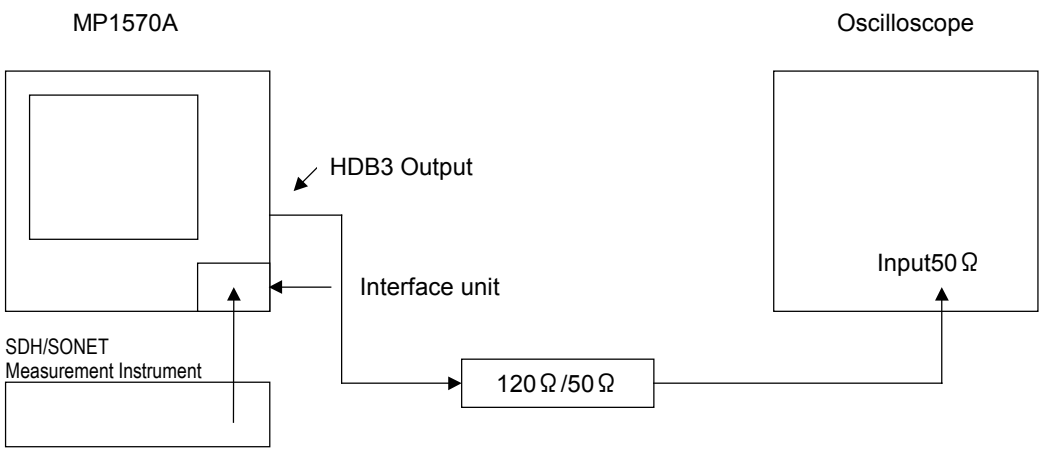

2M/34M/45M/139M Unbalanced (HDB3/B3ZS/CMI)

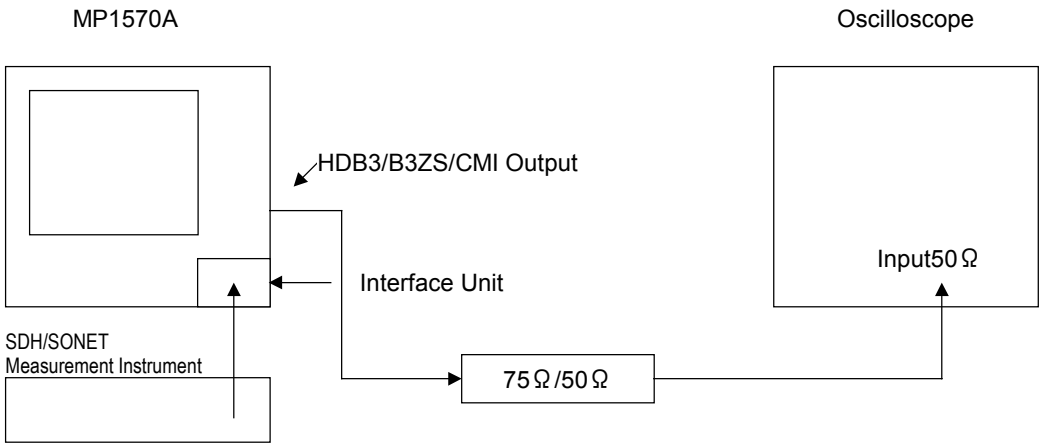

1.5M Balanced (AMI/B8ZS)

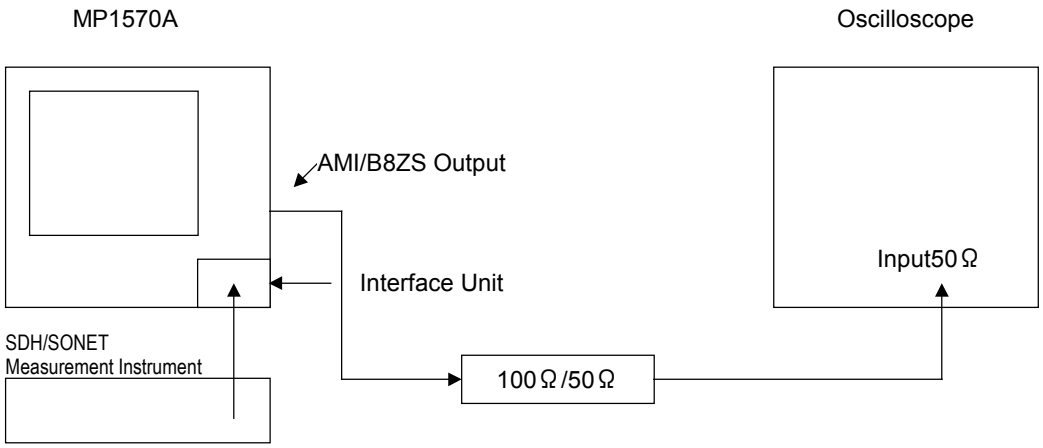

5.2.2 Pulse Mask

The pulse masks are shown below: (they are the same as those for the MP0121Aand MP0122A).

2M

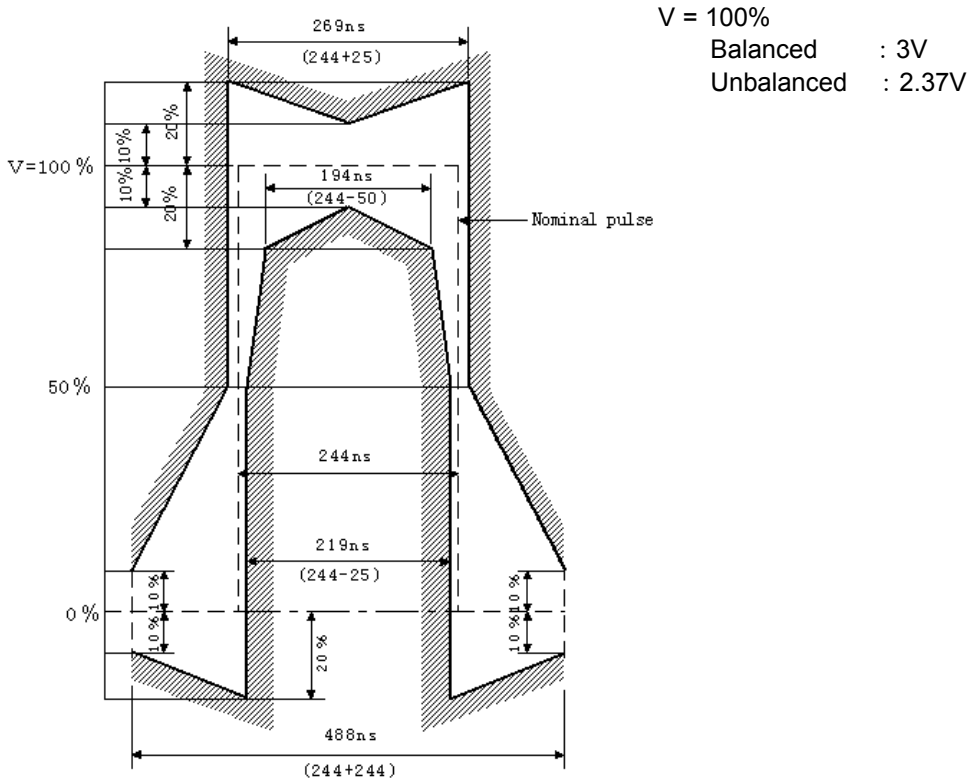

34M

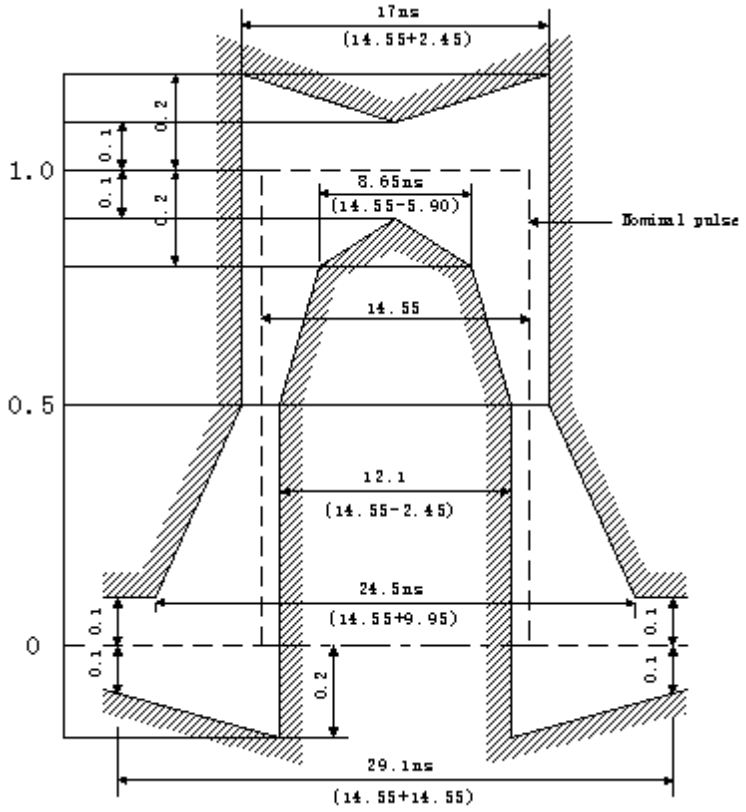
17ns
(14.55+2.45)
1.0
0.5
0
0.2
0.1
0.1
0.2
8.65ns
(14.55-5.90)
Nominal pulse
14.55
12.1
(14.55-2.45)
24.5ns
(14.55+9.95)
0.1
0.1
0.2
0.1
0.1
29.1ns
(14.55+14.55)

139M

Nominal Peak-to-peak voltage(V):1±0.1V
binary 0

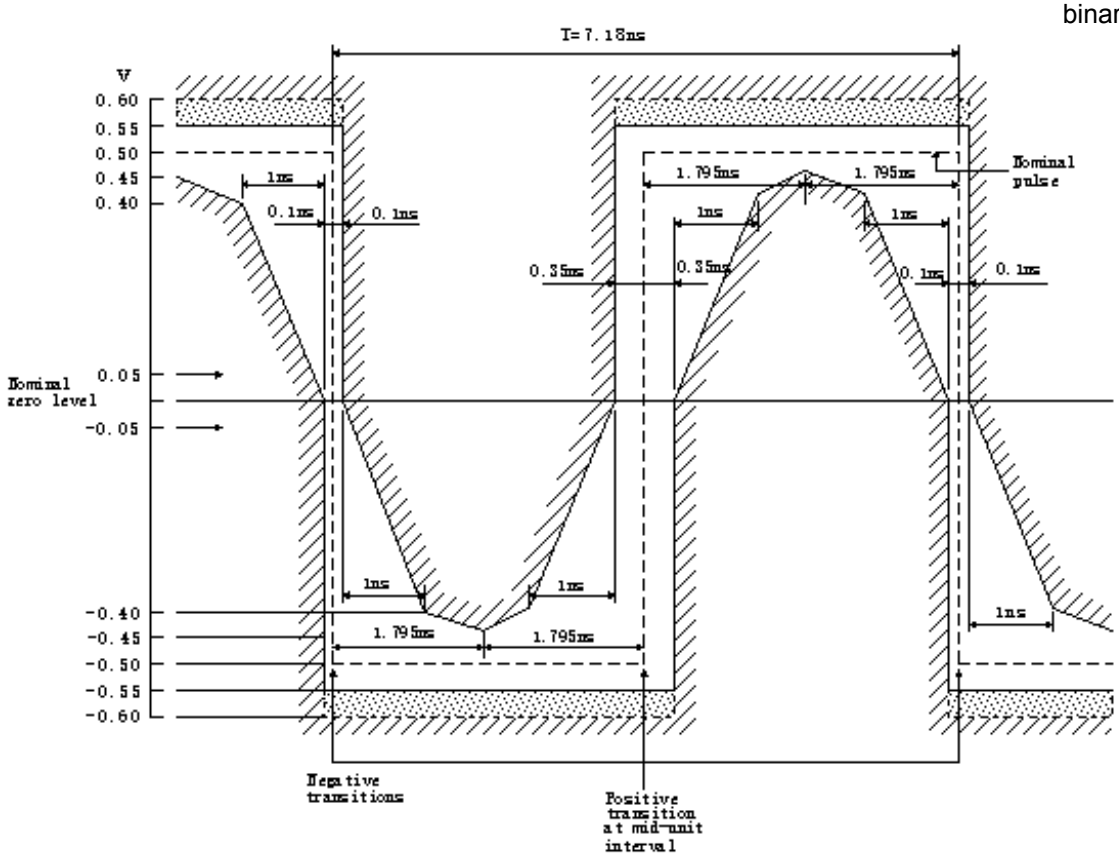

binary 1

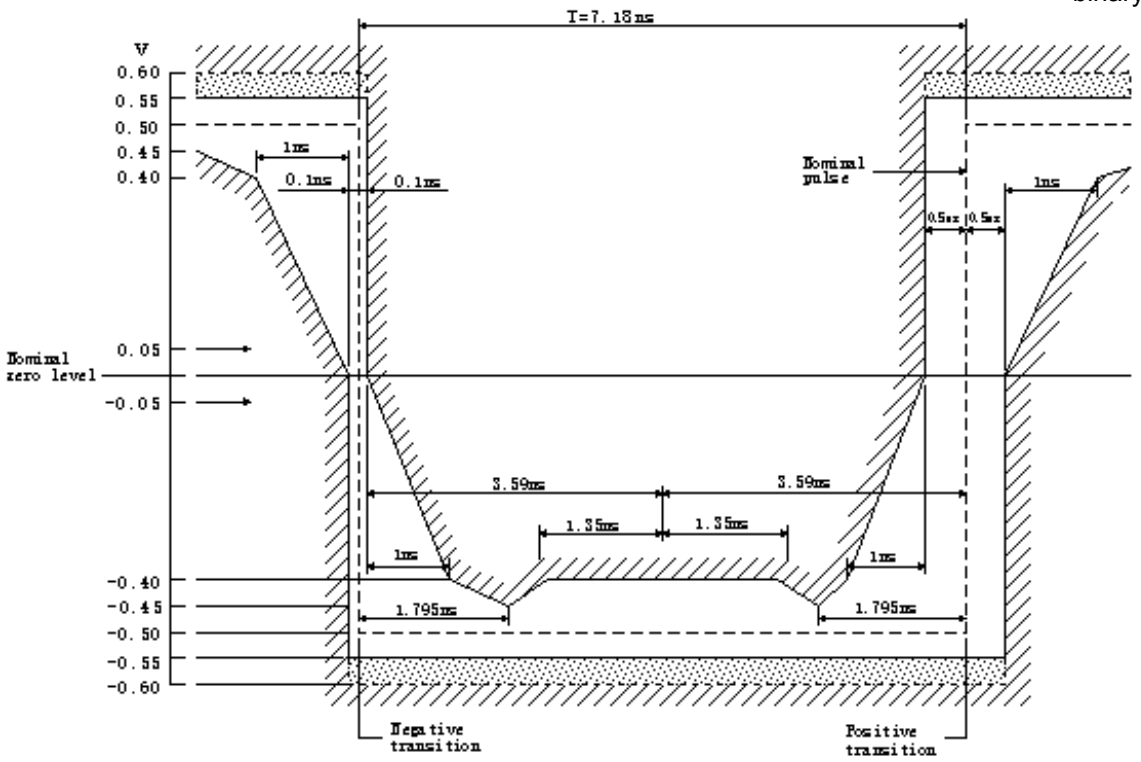
T=7.18ns
V
0.60
0.55
0.50
0.45
0.40
1ns
0.1ns
0.1ns
Nominal pulse
1ns
0.5ns
0.5ns
0.05
Nominal zero level
-0.05
3.59ns
3.59ns
1.35ns
1.35ns
1ns
1ns
-0.40
-0.45
-0.50
-0.55
-0.60
1.795ns
1.795ns
Negative transition
Positive transition

1.5M(DSX=655ft)

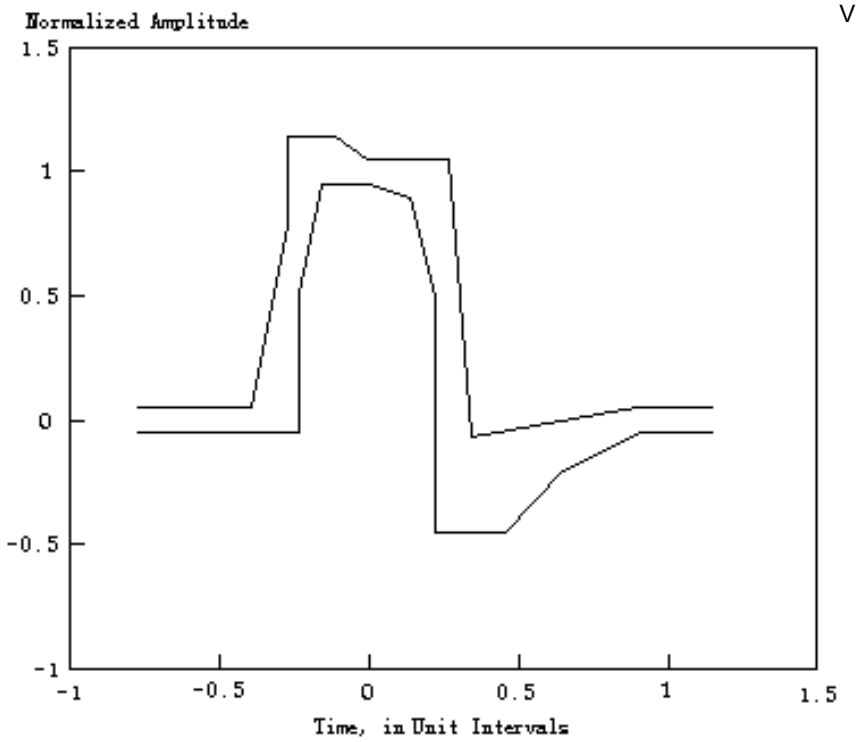

V = 100%

Balanced : 2.4 to 3.6V

45M(DSX=450ft)

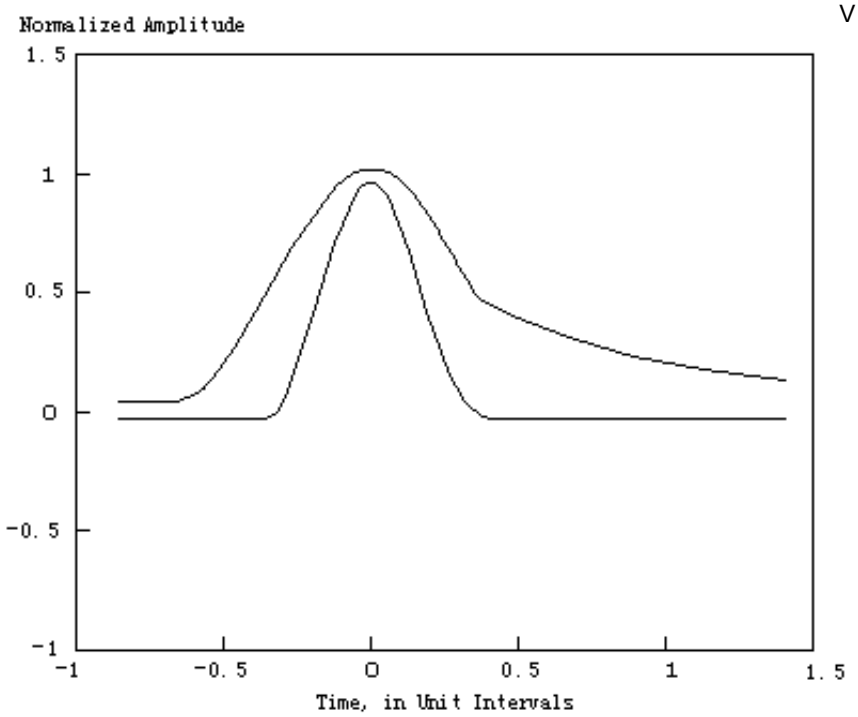

V = 100%

Unbalanced : 0.36 to 0.85V

Appendix A　Specifications of the MP0131A Add/Drop Unit

	Item	Specification
1	AMI/B8ZS output	1.5M output
1.1	Bit rate	1.544Mbit/s
1.2	DSX	0feet :Waveform after passing through an ABAM cable (length : 655 feet) is almost equivalent to that of 655feets. 655feet : ANSI T1.102 Table 1, Figure 1
1.3	Connector	BANTAM 100Ω (balanced)
1.4	Code	AMI/B8ZS
2	HDB3 output	2M output
2.1	Bit rate	2.048Mbit/s
2.2	Waveform	ITU-T G.703 Table 6, Figure 15
2.3	Connector	3-pin Seimens 120Ω (balanced)
2.4	Code	HDB3
3	HDB3/B3ZS/CMI output	2M, 34M, 45M, and 139M output
3.1	Bit rate	2.048Mbit/s, 34.368Mbit/s, 44.736Mbit/s, and 139.264Mbit/s
3.2	Waveform	2M : ITU-T G.703 Table 6, Figure 15 34M : ITU-T G.703 Table 8, Figure 17 139M:ITU-T G.703 Table 9, Figure 19 and 20 45M : 0feet : AMP : $0.9V_{0P}$ Width : 11.2±1.1ns（at 1/2 amplitude） Rise edge / Fall edge : 4.5±1.5ns Overshoot / Undershoot : ≤10% (to amplitude) 450feet : ANSI T1.102 Table4 and 5, Figure 4 and 5 900feet : Waveform is almost equivalent to that of 450 feet signal that passed through a 728 cable (length : 450 feet).
3.4	Connector	BNC75Ω (unbalanced)
3.5	Code	HDB3（2M, 34M） B3ZS（45M） CMI(139M)
4	AMI/B8ZS input	1.5M input
4.1	Bit rate	1.544Mbit/s
4.2	Level	$3V_{0P}$ -3dB to 2dB ＋ 0 to 655feet
4.3	Connector	BANTAM 100Ω (balanced)
4.4	Code	AMI/B8ZS
5	HDB3 input	2M input
5.1	Bit rate	2.048Mbit/s
5.2	Level	$3V_{0P}$±3dB ＋ cable loss 0 to 6dB
5.3	Connector	3-pin Seimens 120Ω (balanced)
5.4	Code	HDB3

	Item	Specification
6	HDB3/B3ZS/CMI input	2M, 34M, 45M, and 139M input
6.1	Bit rate	2.048Mbit/s, 34.368Mbit/s, 44.736Mbit/s, and 139.264Mbit/s
6.2	Level	2M : 2.37V_{0P}±3dB ＋ cable loss 0 to 6dB 34M : 1.0V_{0P}±3dB＋ cable loss 0 to 12dB 45M : 0.91V_{0P}-6dB to 6dB+450 to 900feet 139M : 1.0V_{PP}±3dB＋ cable loss 0 to 12dB
6.3	Connector	BNC 75Ω (unbalanced)
6.4	Code	HDB3（2M, 34M） B3ZS（45M） CMI（139M）
7	Mapping	Conforms to the followings: VC4-139M(Async.) / STS3cSPE-139M(Async.) VC4-VC3-34M(Async.) / STS3cSPE-VC3-34M(Async.) VC4-VC3-45M(Async.) / STS3cSPE-VC3-45M(Async.) VC4-VC12-2M(Async.) / STS3cSPE-VT2SPE-2M(Async.) VC4-TU11-1.5M(Async.) / STS3cSPE-VT1.5-1.5M(Async.) VC3-45M(Async.) / STS1SPE-45M(Async.) VC3-VC12-2M(Async.) / STS1SPE-VT2SPE-2M(Async.) VC3-TU11-1.5M(Async.) / STS1SPE-VT1.5-1.5(Async.)
8	Indication	The input signal is detected and indicated on the front LED.
9	Environmental Performance	Complies with MP1570A.
10	Mechanical Specifications	
10.1	Dimensions, mass	21mm(H)×255mm(W)×167.6mm(D) (Projections are not included.) 1kg or less
10.2	Temperature range	0 to 40 °C for operating -20 to 60 °C for storage

Note

For the Drop signal output, it may take about 20 seconds from completion of parameter-setting/modifying/normal-signal-inputting to stabilization of internal VCXO circuitry.

Appendix B Selftest Error Code

B.1 Selftest Error Codes

If an error is detected in self test, an error code corresponding to the type of error is displayed. The error code consists of two alphanumeric characters and a 4-digit number (hexadecimal).

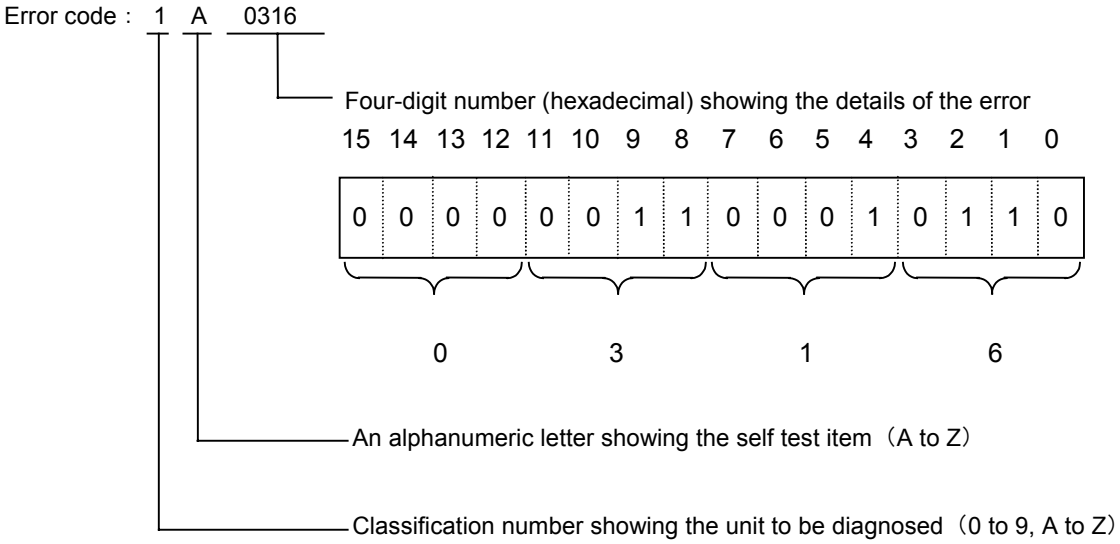

0, 1	:	MP0121A 2/8/34/139/156M(CMI) unit
2, 3	:	MP0122A/B 1.5/45/52M unit
4	:	MP0124A 2/8/34/139M 156/622M Jitter unit
5	:	MP0125A 1.5/45/52M 156/622M Jitter unit
6, 7	:	MP0126A 2/8/34/139M 1.5/45/52M 156M/622M Jitter unit
8, 9	:	MP0123A ATM unit
A	:	MP0127A, MP0128A, MP0129A 2.5G unit
F	:	MU150008A, MU150009A, MU150010A 2.5G unit
B	:	MP0130A 2.5G Jitter unit
C	:	MP0131A Add/Drop unit
D	:	MU150000A 2.5G/10G unit
E	:	MU150001A, MU150002A 10G unit
G - V	:	Reserved
W	:	MP0111A, MP0112A
X	:	MP0113A(1.31), MP0113A(1.55)
Y	:	MP0109A, MP0110A
Z	:	MP0105A, MP0108A

B.2 Error Codes of MP0131A

The displayed message and error content at each bit are listed below.。

Char.	Message	Bit	Error Details
CA	Add/Drop		An error is detected in Add/Drop with the following conditions.
		b0	BRate=156M,Mapping=AU4-139M(Async.)
		b1	BRate=156M,Mapping=AU4-45M(Async.), Drop DSX=450ft
		b2	BRate=156M,Mapping=AU3-45M(Async.), Drop DSX=450ft
		b3	BRate=156M,Mapping=AU4-34M(Async.)
		b4	BRate=156M,Mapping=AU4-2M(Async.), Interface=Unbalanced
		b5	BRate=156M,Mapping=AU4-2M(Async.), Interface=Balanced
		b6	BRate=156M,Mapping=AU4-1.5M(Async.), Code=AMI,Drop
		b7	DSX=655ft
			BRate=156M,Mapping=AU4-1.5M(Async.), Code=B8ZS,Drop
			DSX=655ft

Note

The contents of only MP0131A Add/Drop unit error code are listed. Refer to the MP1570A SONET/SDH/PDH/ATM Analyzer operation manual Vol.1, for details about other error codes.

Appendix C Relation Between Screen and Commands

The following describes the relation between program commands and panel screens. Refer to the MP1570A SONET/SDH/PDH/ATM Analyzer operation manual Vol.2 Remote Control, for details about program commands.

Setup : Mapping screen

```
Setup          Mapping          [Tx&Rx]     Time 10:46:45 05/Jan/2000
 Config.[     SDH/PDH     ]   Meas. mode[Out-of-service]

 Bit rate        [      156M      ]


 Mapping  [STM1-AUG-AU4-VC4-TUG3-TUG2-TU11-VC11-1.5M(Async.)            ]

   Dummy STM     [      Copy      ]
                                    Add/Drop          [      ON        ]
                                       DSX            [     655ft      ]
                                       Code           [     B8ZS       ]




 Clock           [          Internal          ]
```

```
Setup          Mapping          [Tx&Rx]     Time 11:06:57 14/Mar/2000
 Config.[    SONET/DSn    ]   Meas. mode[Out-of-service]

 Bit rate        [      156M      ]


 Mapping  [STS3-STS3-STS3cSPE-TUG3-VTG-VT1.5-VT1.5SPE-1.5M(Async.)      ]
   Mixed Payload [OFF]
   Dummy STS     [      Copy      ]
                                    Add/Drop          [      ON        ]
                                       DSX            [      0ft       ]
                                       Code           [     B8ZS       ]




 Clock           [          Internal          ]
```

(1) :ROUTe:ADD[:MODE]

(2) :ROUTe:ADD:INPut

(3) :ROUTe:DROP[:MODE]

(4) :ROUTe:DROP:DSX

(5) :ROUTe:DROP:CODE